US010429144B2

(12) **United States Patent**
Cudazzo

(10) **Patent No.: US 10,429,144 B2**
(45) **Date of Patent: Oct. 1, 2019**

(54) **AUTOMATIC SUBMACHINE GUN FOR EXPLOITING RECOIL COMPRISING TWO OPPOSING LEVERS FOR THE HAMMER, ONE ASSOCIATED WITH SINGLE-SHOT FIRING MODE AND THE OTHER WITH BURST FIRING MODE**

(71) Applicant: **Far League S.R.L.**, Milan (IT)

(72) Inventor: **Antonio Cudazzo**, Milan (IT)

(73) Assignee: **Far League S.R.L.**, Milan (IT)

(*) Notice: Subject to any disclaimer, the term of this patent is extended or adjusted under 35 U.S.C. 154(b) by 0 days.

(21) Appl. No.: **15/548,001**

(22) PCT Filed: **Feb. 5, 2015**

(86) PCT No.: **PCT/IT2015/000026**
§ 371 (c)(1),
(2) Date: **Aug. 1, 2017**

(87) PCT Pub. No.: **WO2016/125196**
PCT Pub. Date: **Aug. 11, 2016**

(65) **Prior Publication Data**

US 2018/0023912 A1 Jan. 25, 2018

(51) **Int. Cl.**
F41A 19/46 (2006.01)
F41A 5/02 (2006.01)
(Continued)

(52) **U.S. Cl.**
CPC ***F41A 19/46*** (2013.01); ***F41A 3/54*** (2013.01); ***F41A 5/02*** (2013.01); ***F41A 9/55*** (2013.01);
(Continued)

(58) **Field of Classification Search**
CPC .. F41A 3/54; F41A 19/12; F41A 19/33; F41A 19/14; F41A 5/02; F41A 17/72;
(Continued)

(56) **References Cited**

U.S. PATENT DOCUMENTS

2,466,017 A * 4/1949 Farber F41A 9/83 42/72
3,651,736 A * 3/1972 Ingram F41A 3/54 89/132

(Continued)

FOREIGN PATENT DOCUMENTS

DE 46761 C 5/1889

OTHER PUBLICATIONS

International Search Report dated Sep. 29, 2015; International Application No. PCT/IT2015/000026; dated Feb. 5, 2015; 6 pages.
(Continued)

Primary Examiner — Jonathan C Weber
(74) *Attorney, Agent, or Firm* — Blank Rome LLP

(57) **ABSTRACT**

An automatic submachine gun for exploiting recoil, that includes a stock; a fixed barrel; a grip provided with an extractable butt; a bolt sliding in direction parallel to the longitudinal axis of the barrel inside the stock for locking the breech of the barrel; a device for recovering the recoil kinetic energy of the bolt; a hammer swinging in opposition and through the action of a spring actuator element between a cocked position and an uncocked position; a trigger assembly for the hammer; an opposing lever of the hammer for single shot fire; and an opposing lever of the hammer for continuous burst fire; a manual fire mode selector; an extractable magazine for loading cartridge ammunition; and a firing pin.

13 Claims, 20 Drawing Sheets

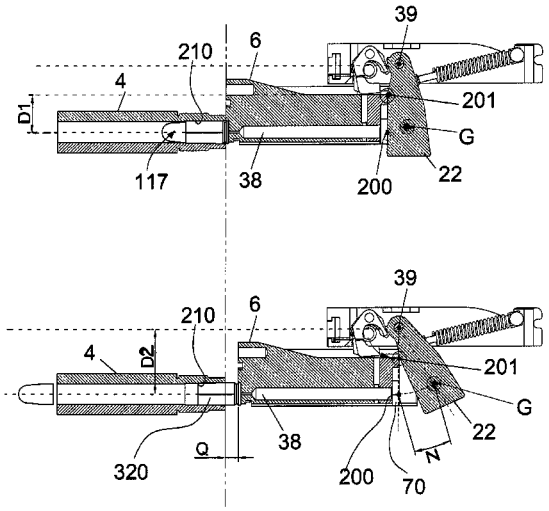

(51) **Int. Cl.**

F41A 19/14	(2006.01)
F41A 3/54	(2006.01)
F41A 9/55	(2006.01)
F41A 9/69	(2006.01)
F41A 9/70	(2006.01)
F41A 11/00	(2006.01)
F41A 15/14	(2006.01)
F41A 17/72	(2006.01)
F41A 19/12	(2006.01)
F41A 21/34	(2006.01)
F41C 23/04	(2006.01)
F41G 1/02	(2006.01)
F41A 19/45	(2006.01)
F41A 5/08	(2006.01)
F41A 5/10	(2006.01)
F41C 7/00	(2006.01)

(52) **U.S. Cl.**

CPC ***F41A 9/69*** (2013.01); ***F41A 9/70*** (2013.01); ***F41A 11/00*** (2013.01); ***F41A 15/14*** (2013.01); ***F41A 17/72*** (2013.01); ***F41A 19/12*** (2013.01); ***F41A 19/14*** (2013.01); ***F41A 19/45*** (2013.01); ***F41A 21/34*** (2013.01); ***F41C 23/04*** (2013.01); ***F41G 1/02*** (2013.01); *F41A 5/08* (2013.01); *F41A 5/10* (2013.01); *F41C 7/00* (2013.01)

(58) **Field of Classification Search**

CPC F41A 9/55; F41A 9/70; F41A 21/34; F41A 23/04; F41A 11/00; F41A 15/14; F41A 19/27; F41A 19/46; F41G 1/02

USPC 89/129.01, 142, 190, 136, 194, 197, 128, 89/129.02; 42/71.02, 73

See application file for complete search history.

(56) **References Cited**

U.S. PATENT DOCUMENTS

3,774,500	A *	11/1973	Into	F41A 19/02 89/129.01
4,004,496	A	1/1977	Snodgrass	
4,109,559	A *	8/1978	Davis	F41A 19/10 42/71.02
6,564,492	B2 *	5/2003	Weldle	F41C 23/14 42/73

OTHER PUBLICATIONS

Written Opinion dated Sep. 29, 2015; International Application No. PCT/IT2015/000026; dated Feb. 5, 2015; 12 pages.

Retrieved from the Internet: URL:https://en.wikipedia.org/wiki/CAR-15; *the paragraph entitled "Colt Model 653 M16A1 Carbine"; retrieved Sep. 28, 2015; 2 pages.

English translation; German Application No. 46761 dated Oct. 1888; 4 pages.

* cited by examiner

Fig. 1

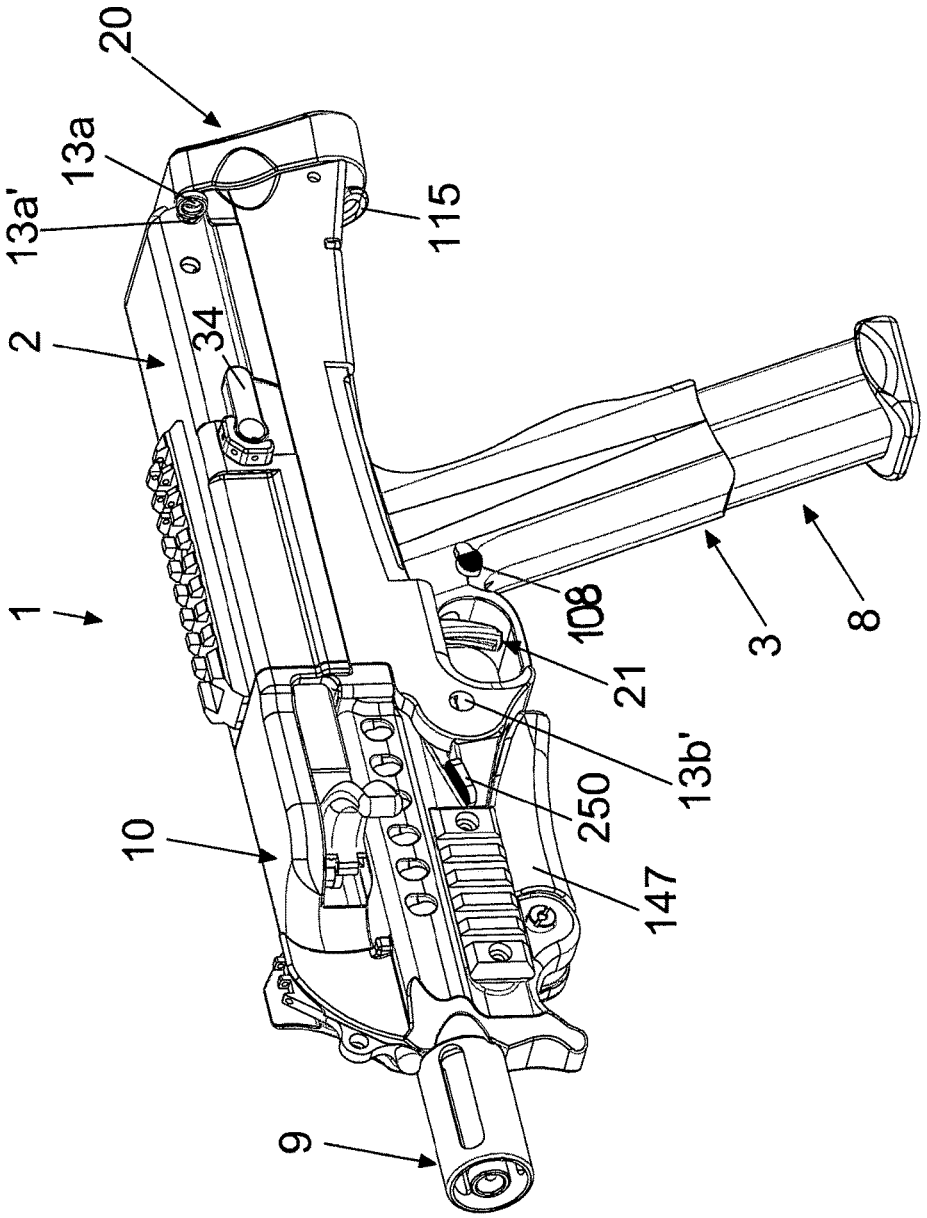

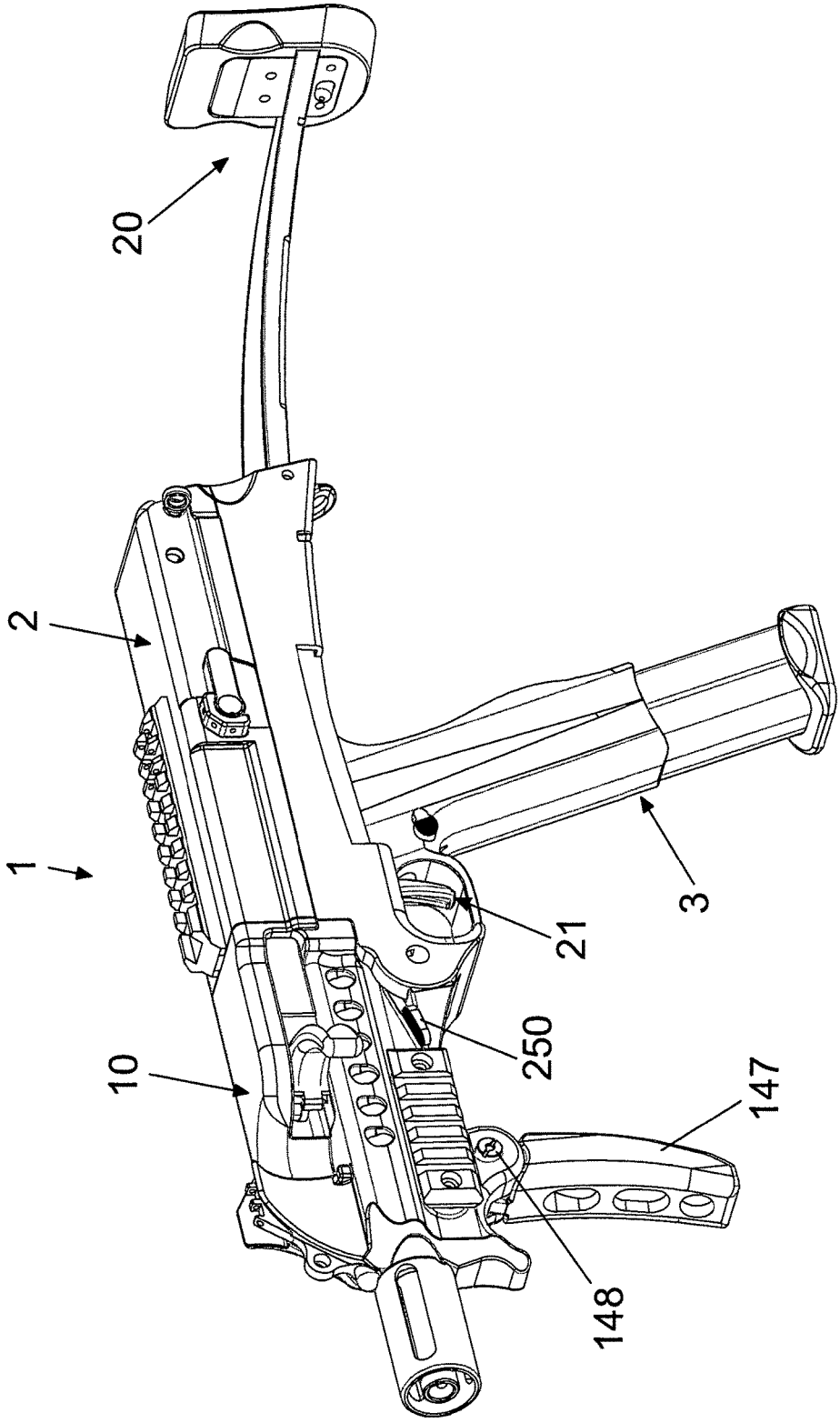

Fig. 2

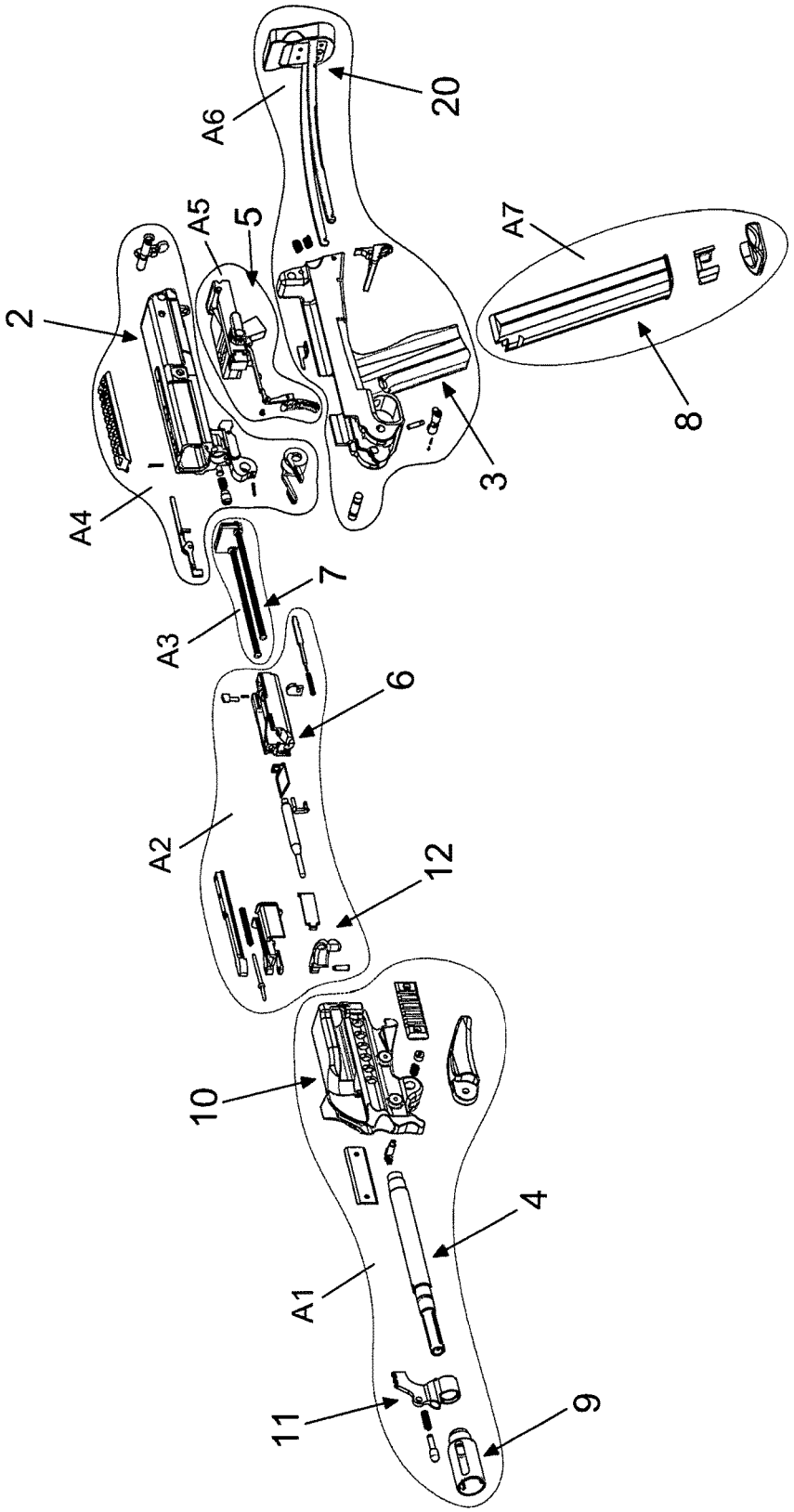

Fig. 3

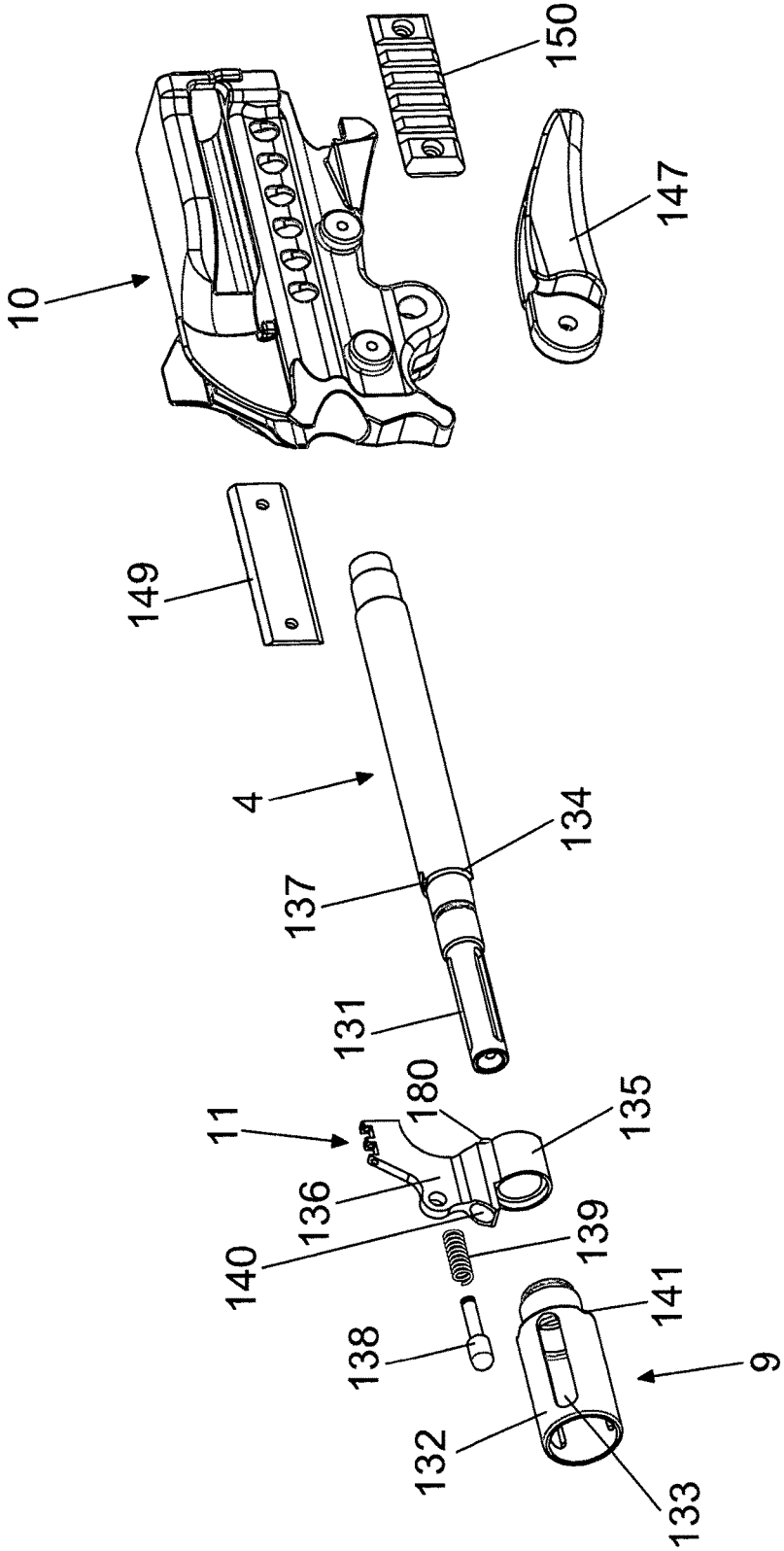
150
147
10
149
4
134
137
131
180
135
11
136
139
140
141
138
9
132
133

Fig. 4

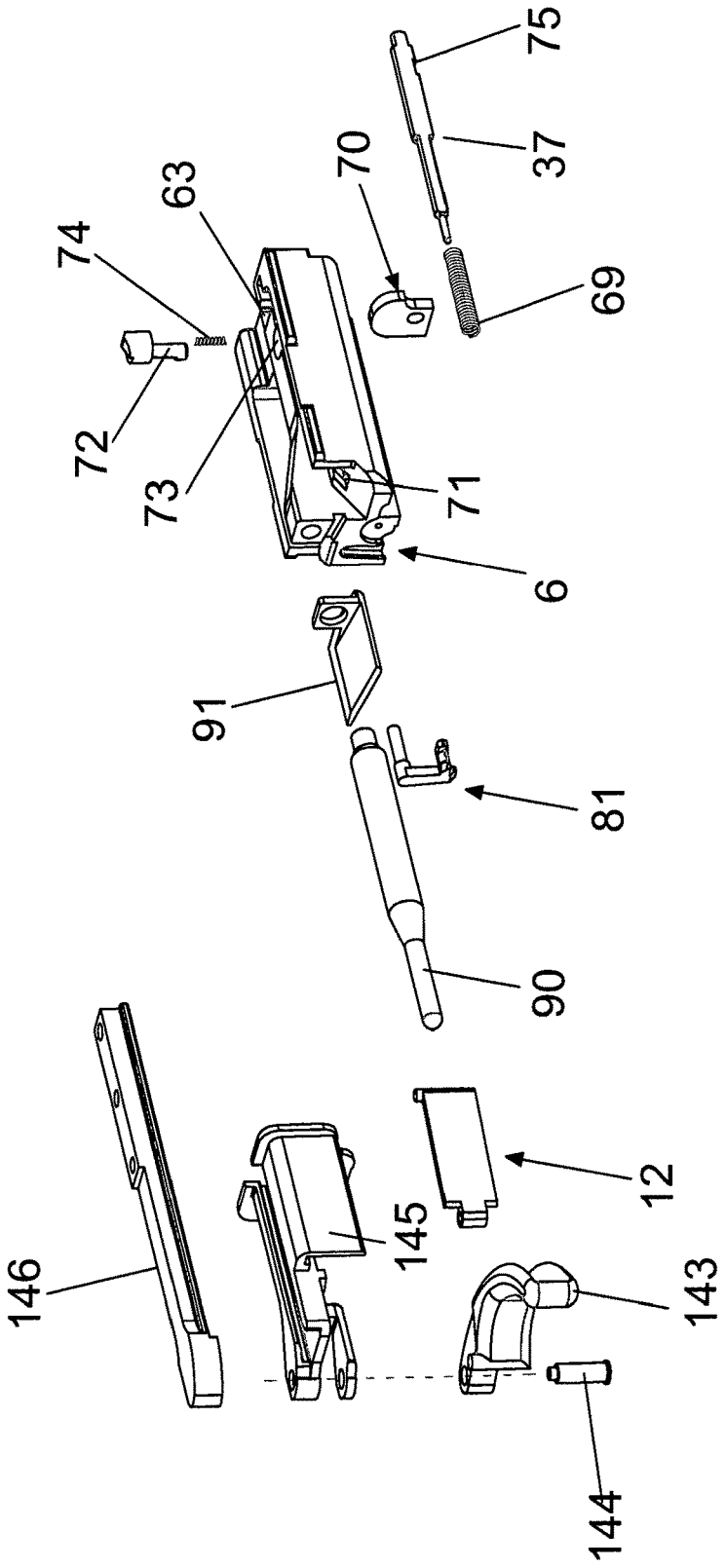

Fig. 5a

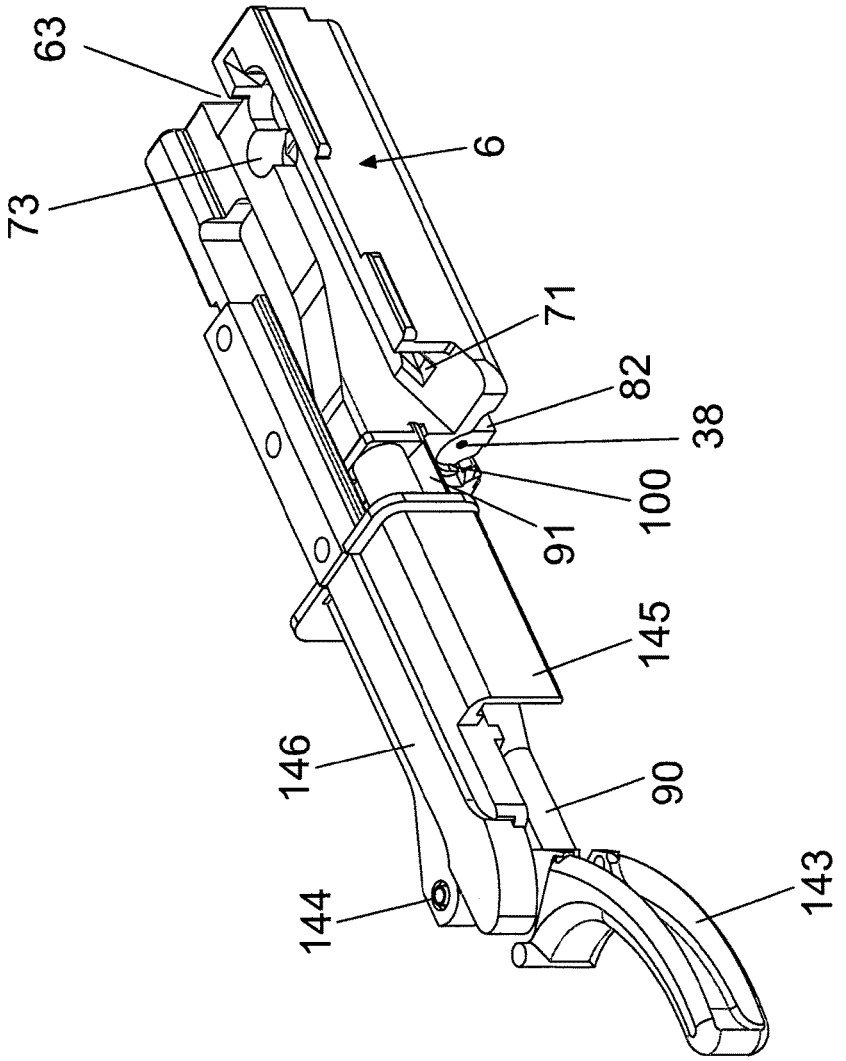

Fig. 5b

Fig. 6b

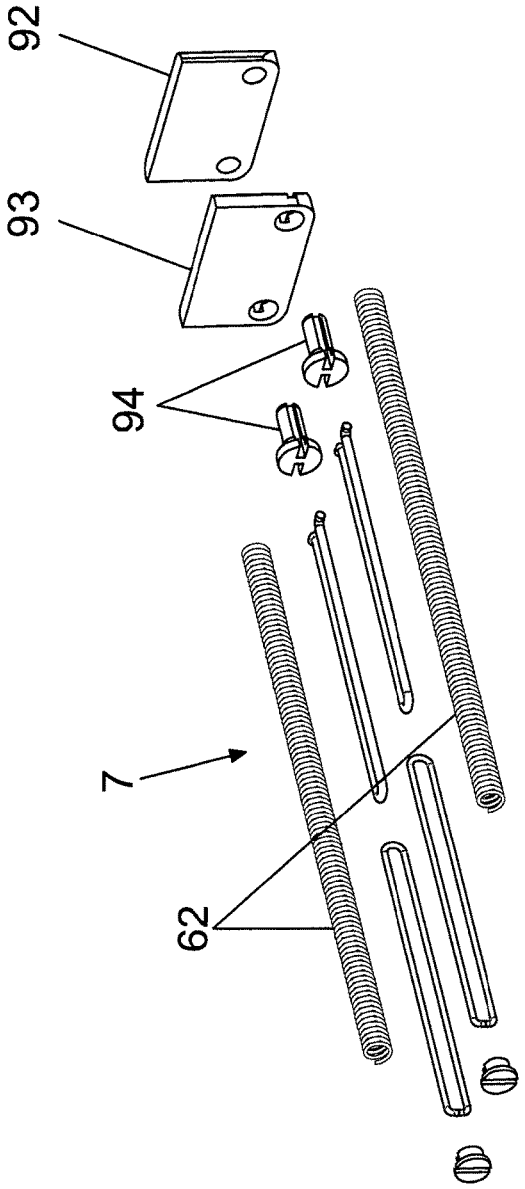

Fig. 6a

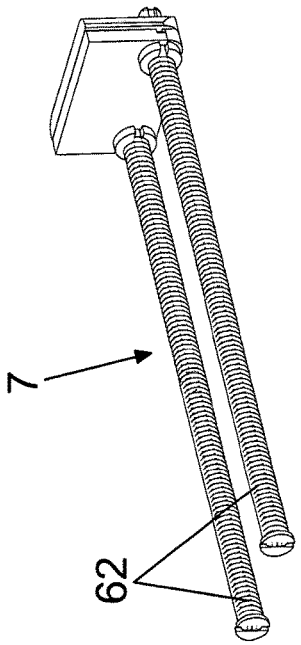

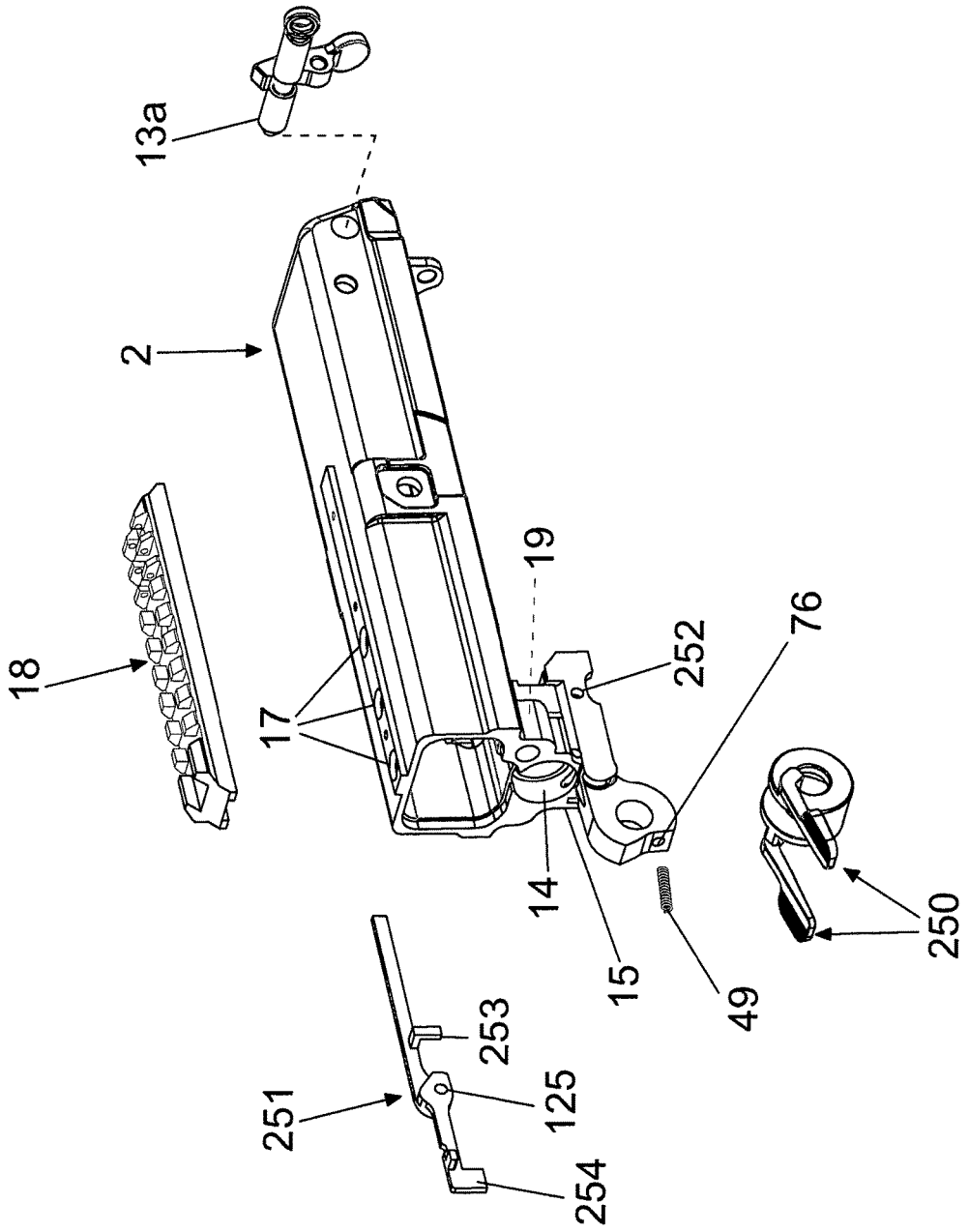

Fig. 7

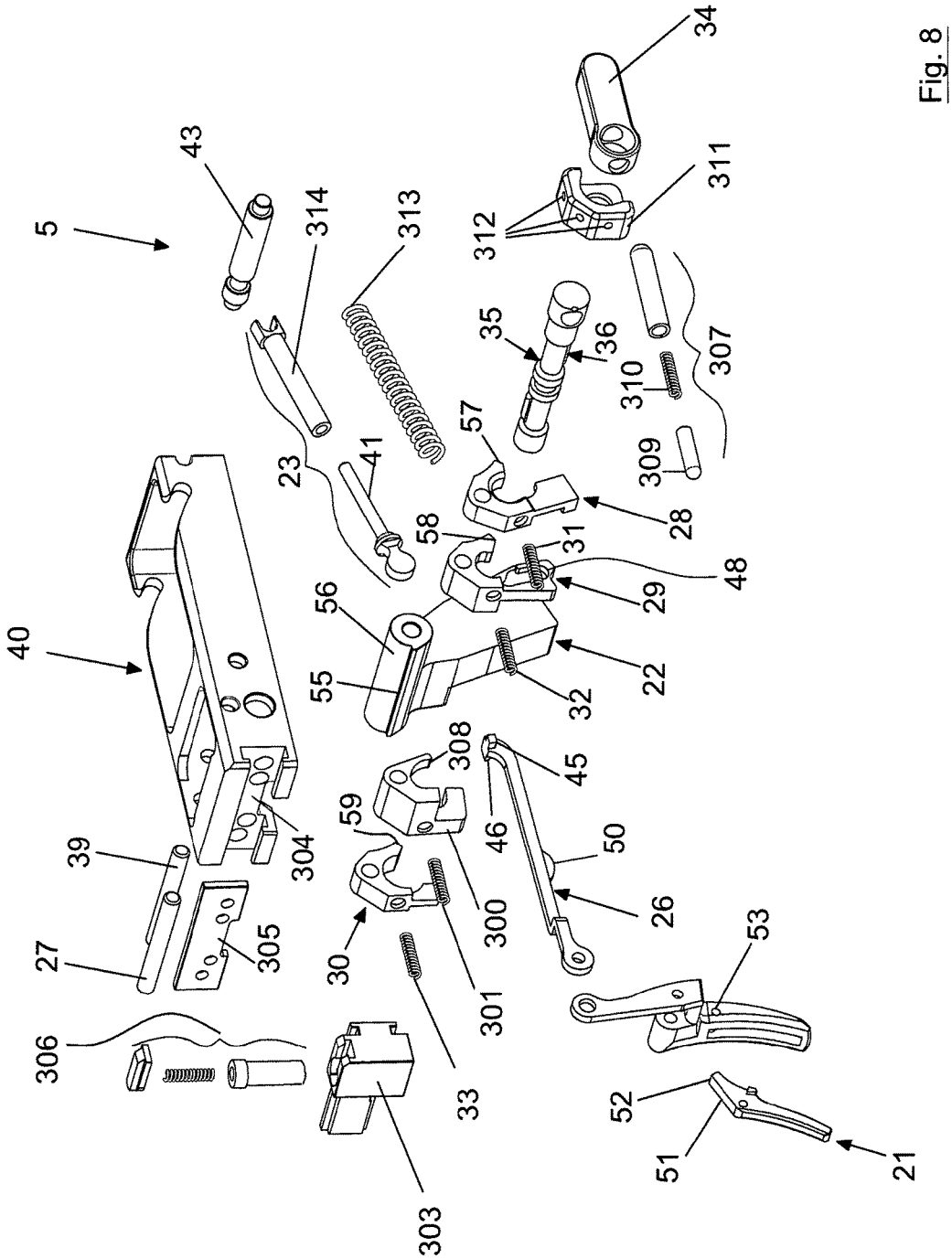
5
43
314
313
34
311
312
35
36
307
310
309
57
23
41
58
28
31
48
29
56
55
32
22
40
308
45
59
46
50
39
304
300
26
27
305
30
301
53
306
33
52
51
21
303

Fig. 8

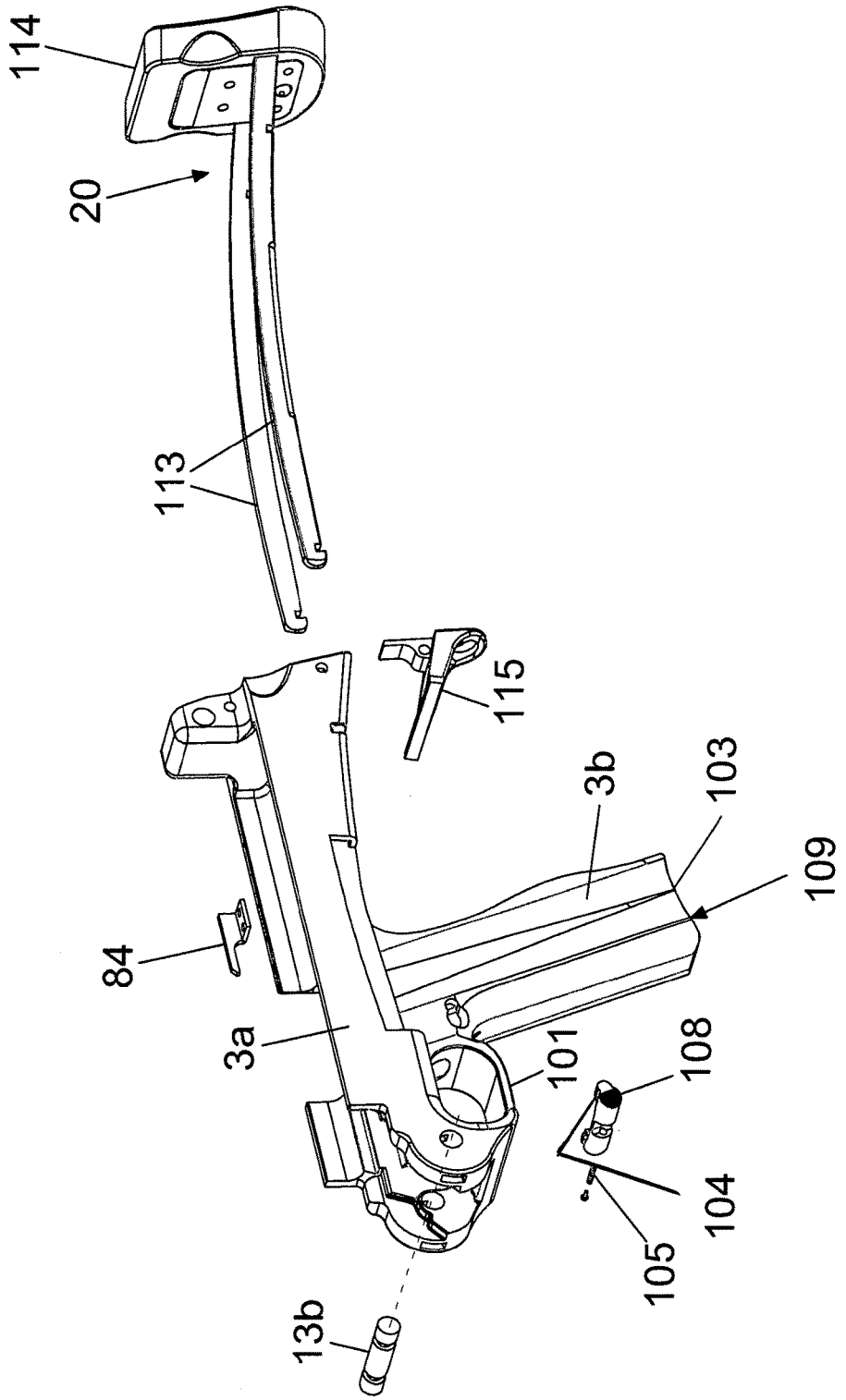

Fig. 9

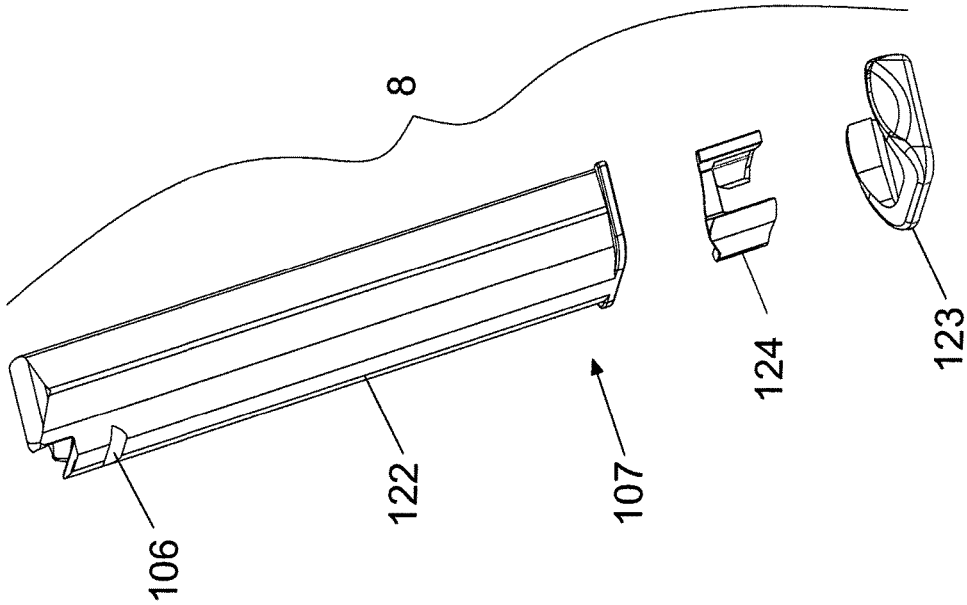

Fig. 10a

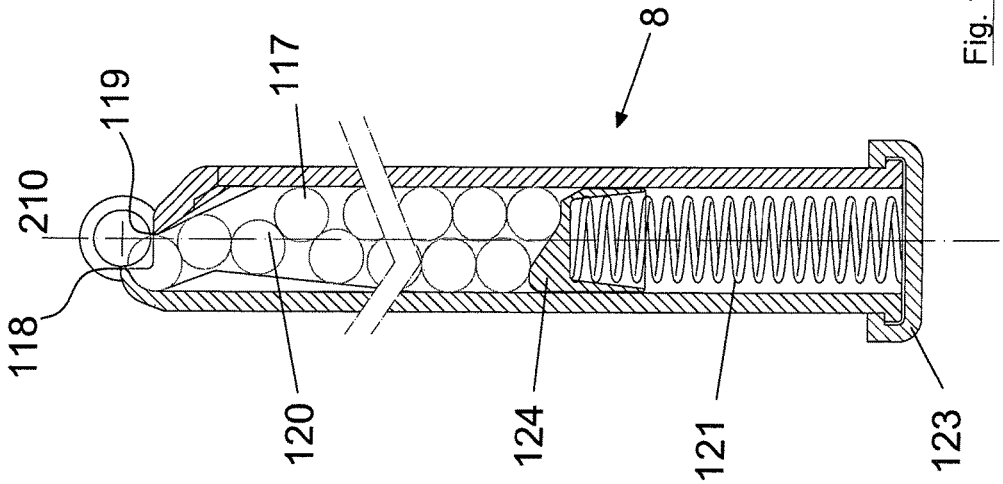

Fig. 10b

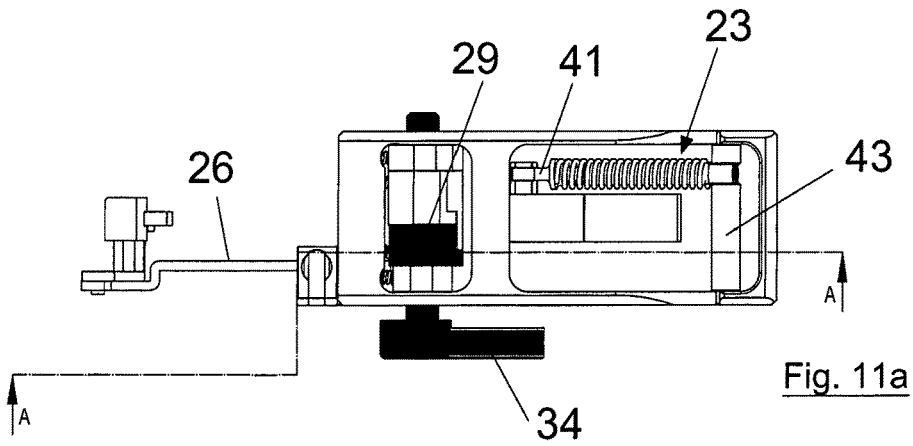

Fig. 11a

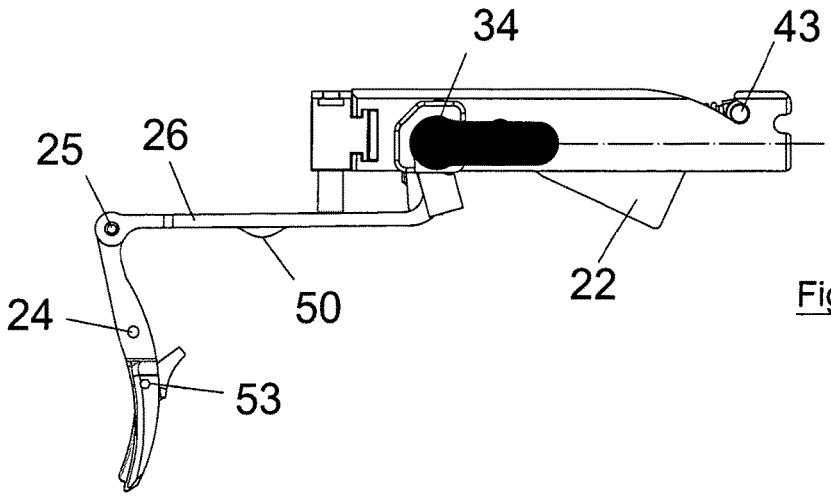

Fig. 11b

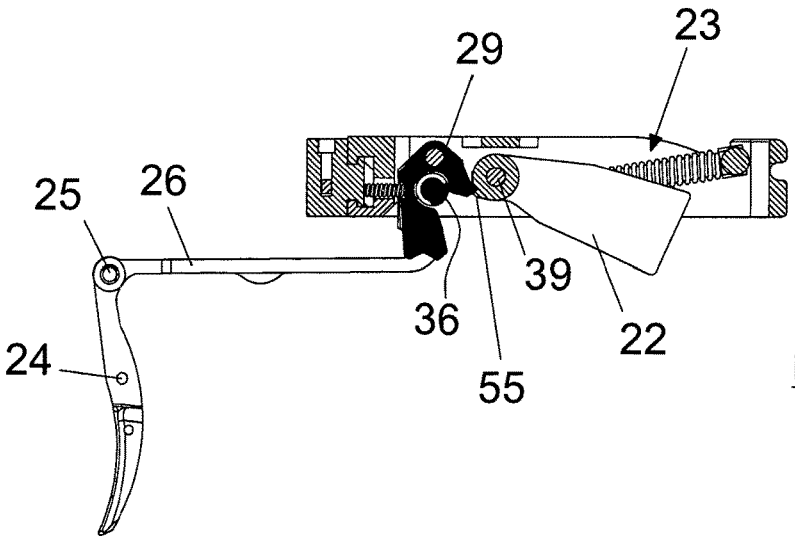

Fig. 11c

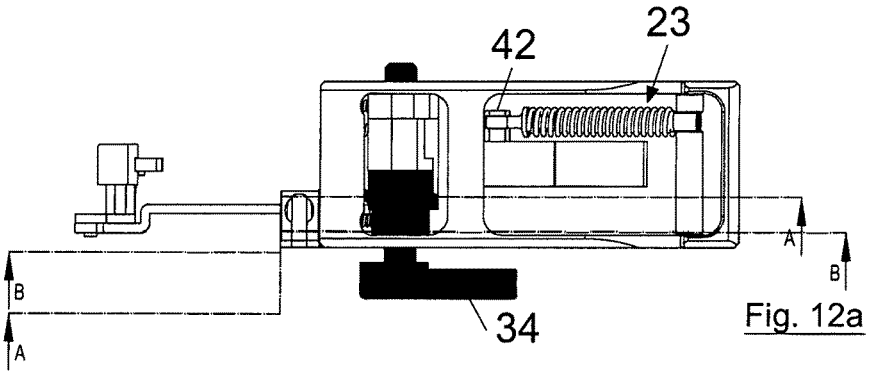

Fig. 12a

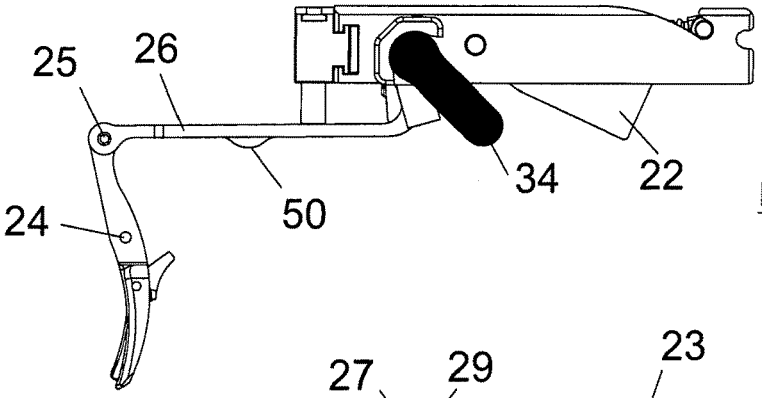

Fig. 12b

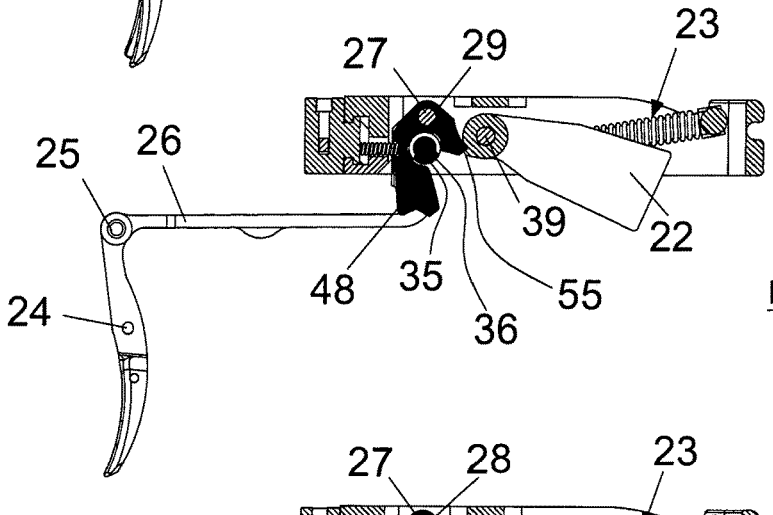

Fig. 12c

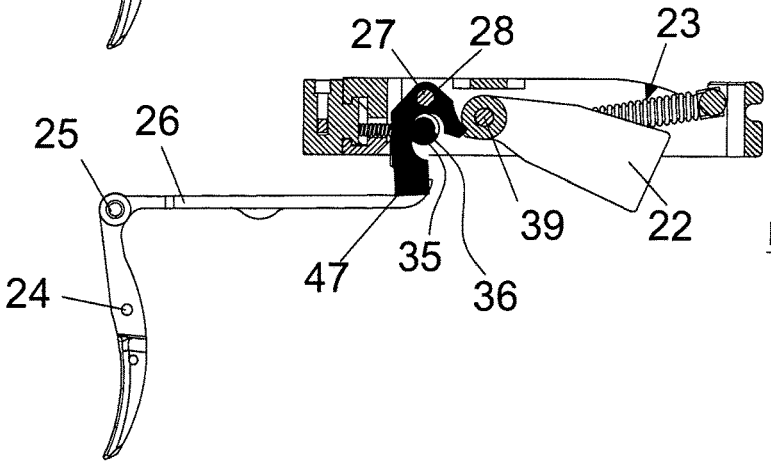

Fig. 12d

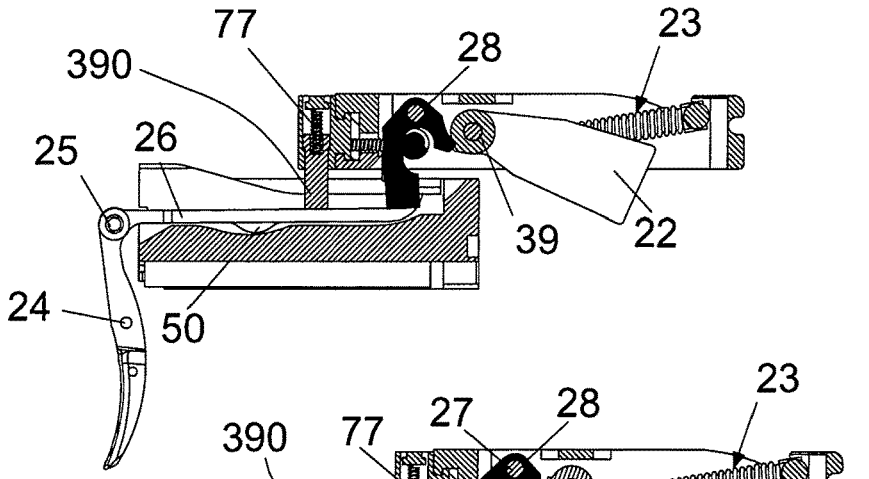

Fig. 13a

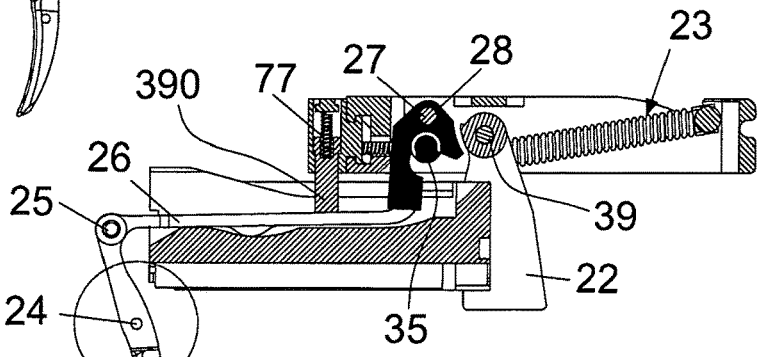

Fig. 13b

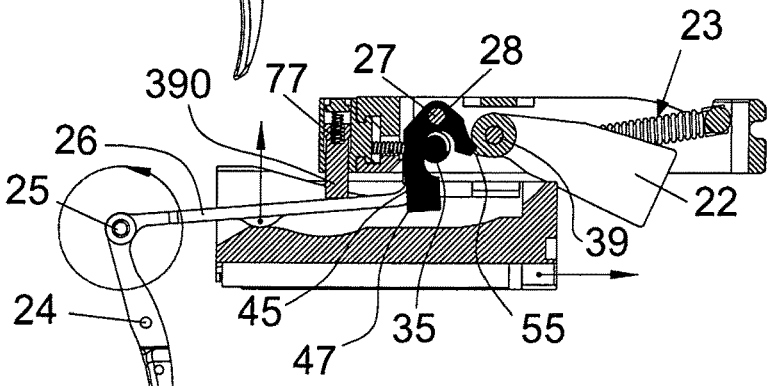

Fig. 13c

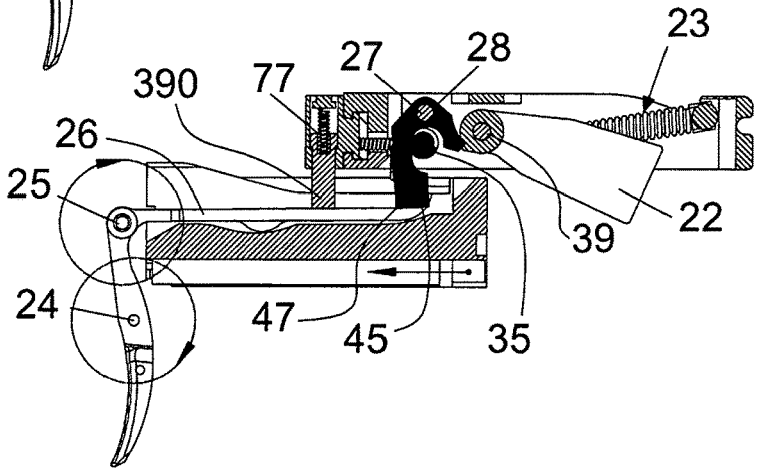

Fig. 13d

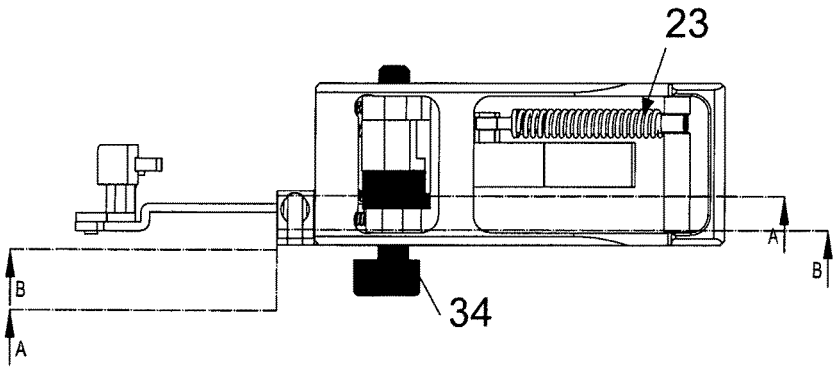

Fig. 14a

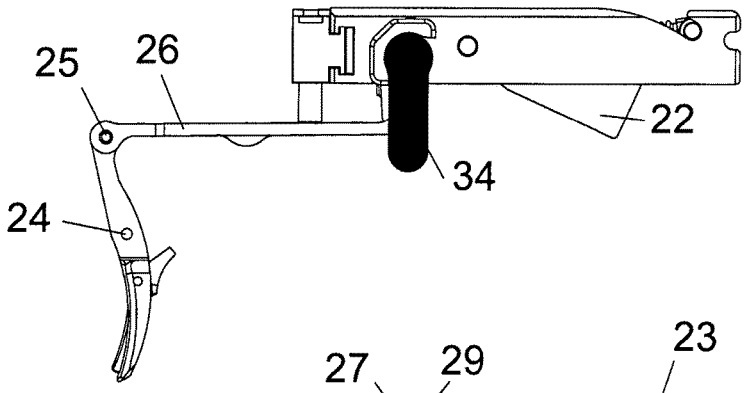

Fig. 14b

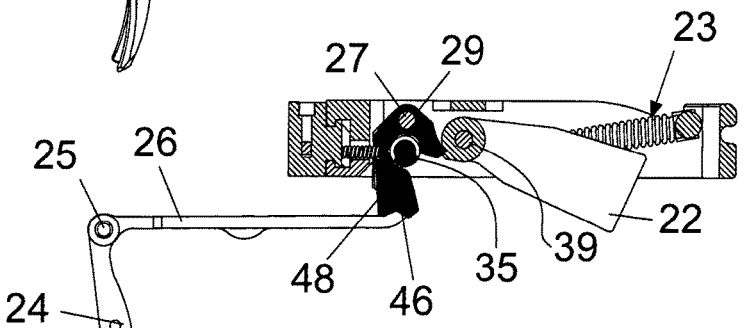

Fig. 14c

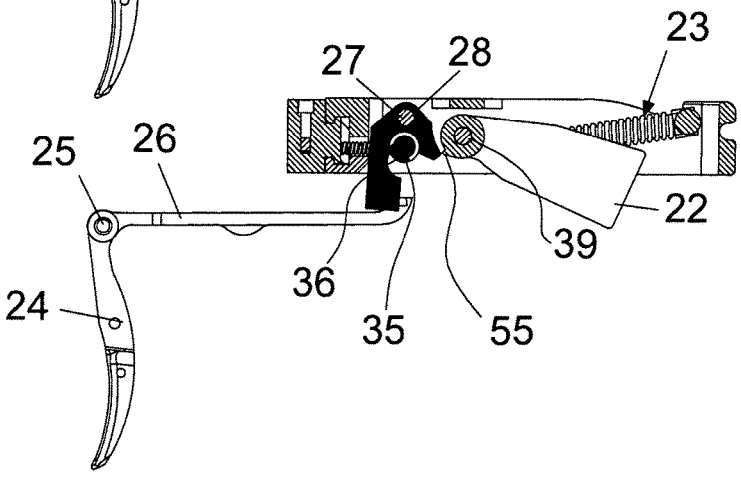

Fig. 14d

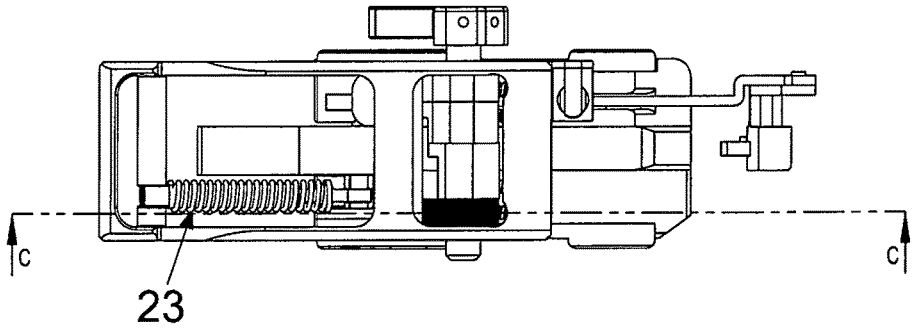

Fig. 15a

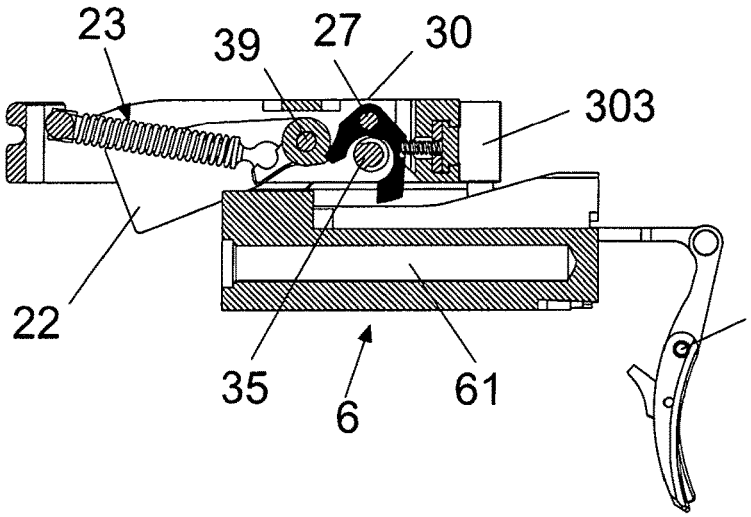

Fig. 15b

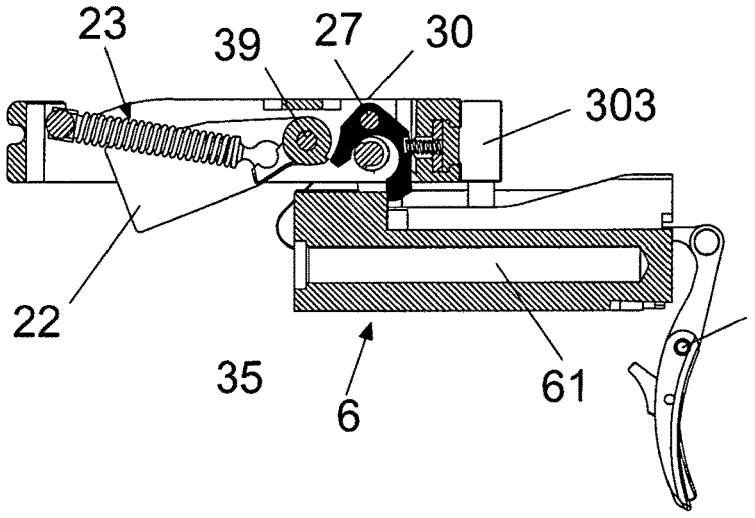

Fig. 15c

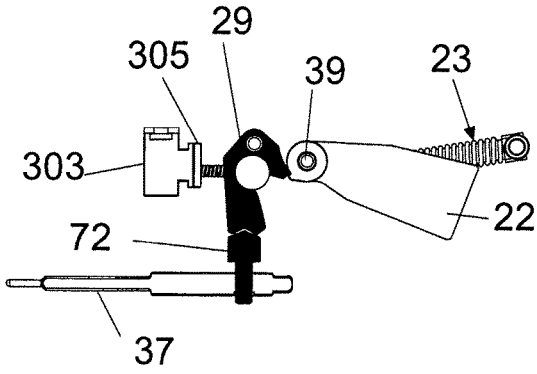

Fig. 16a

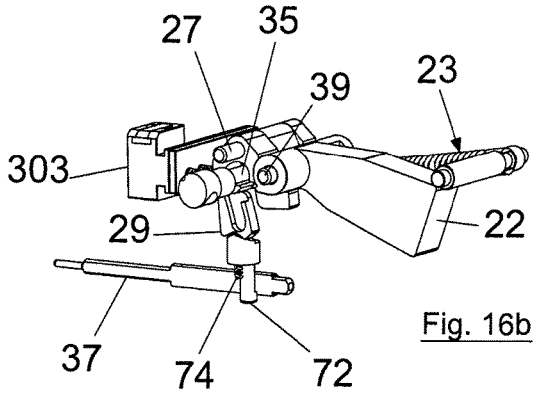

Fig. 16b

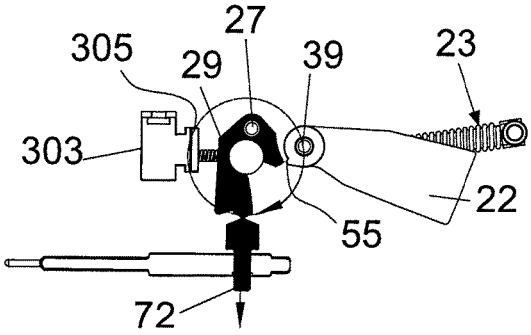

Fig. 16c

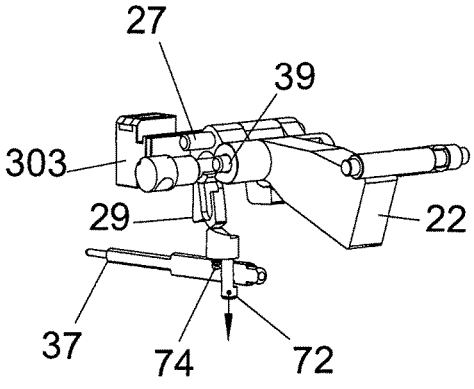

Fig. 16d

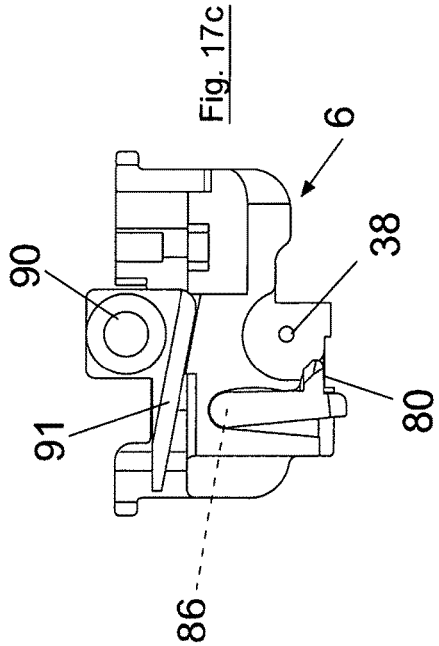

Fig. 17c

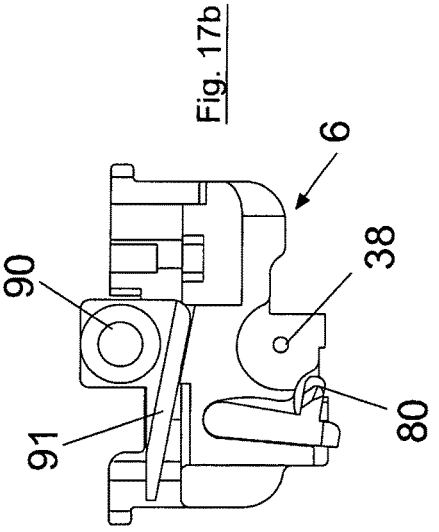

Fig. 17b

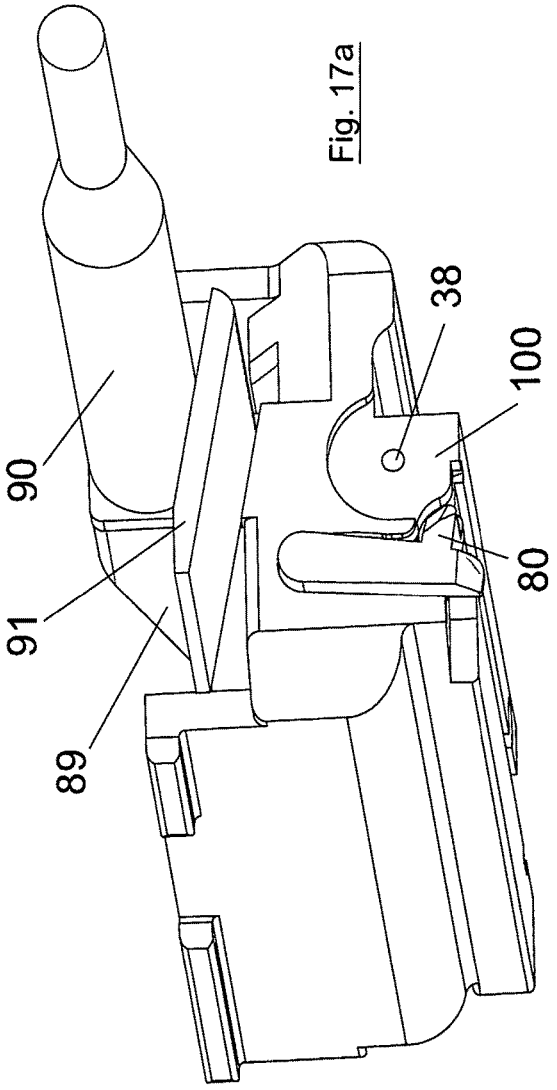

Fig. 17a

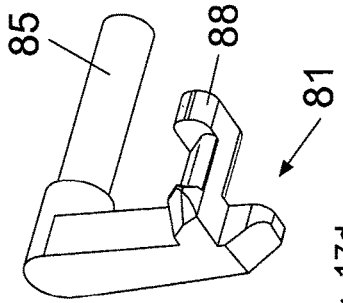

Fig. 17d

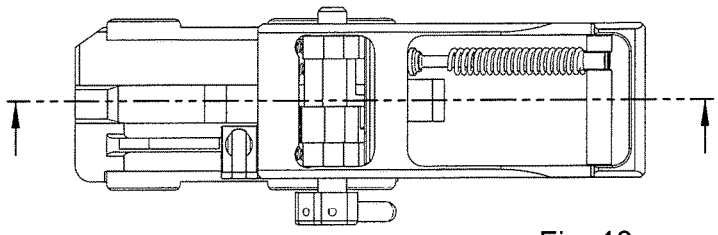

Fig. 18a

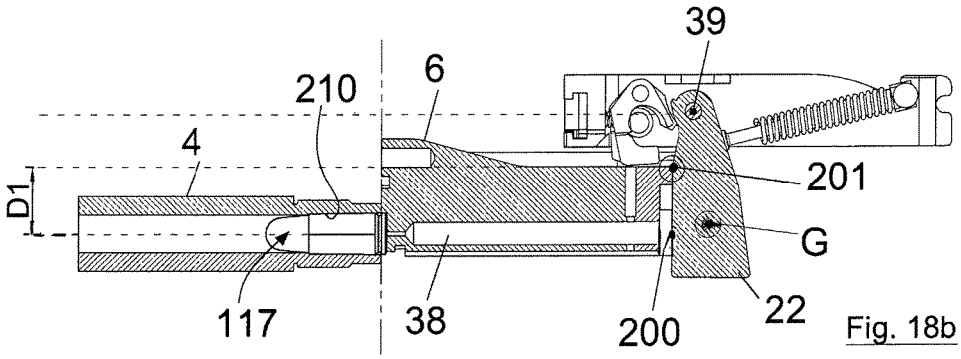

Fig. 18b

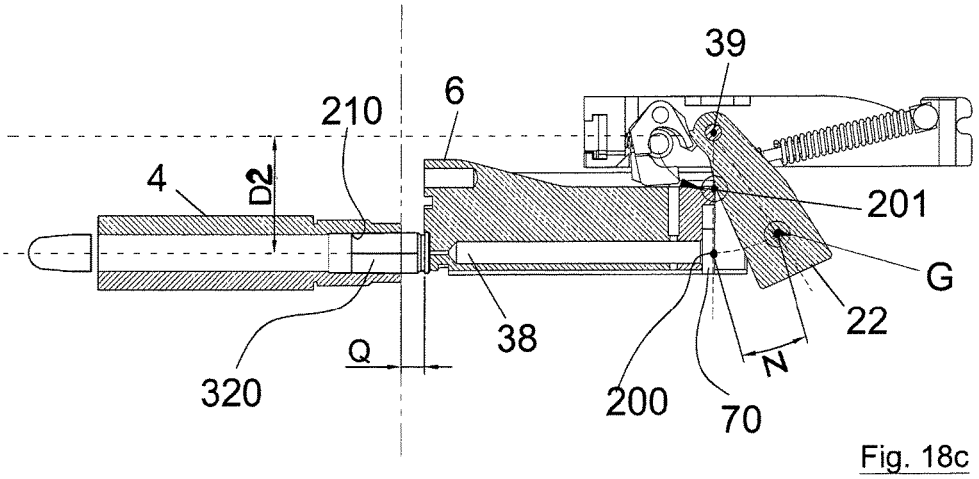

Fig. 18c

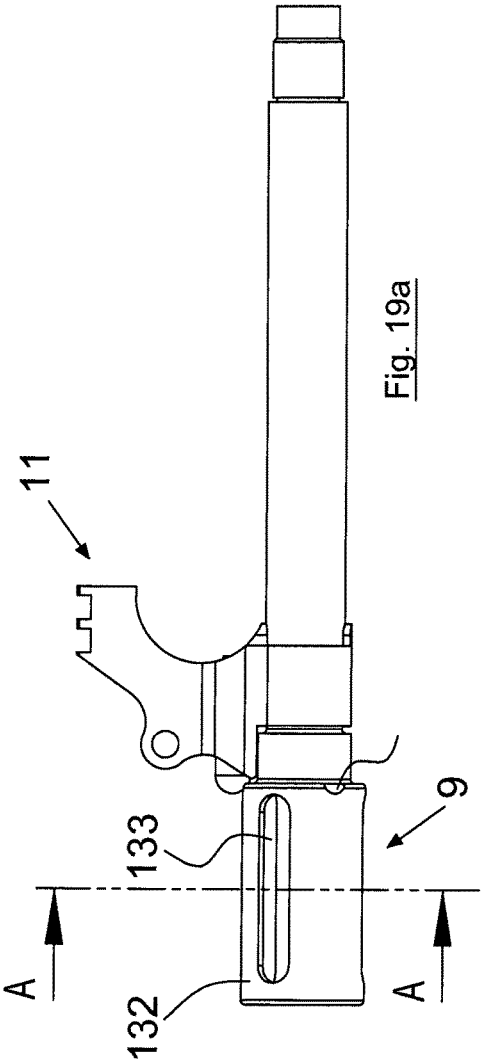

Fig. 19a

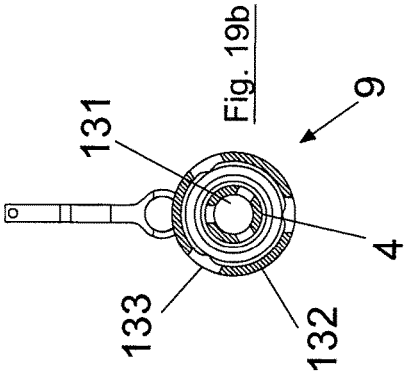

Fig. 19b

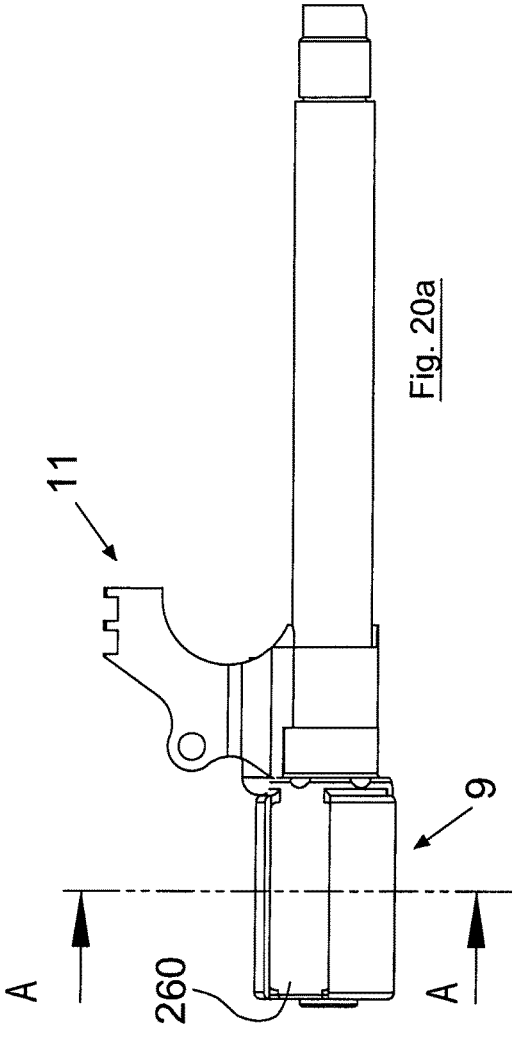

Fig. 20a

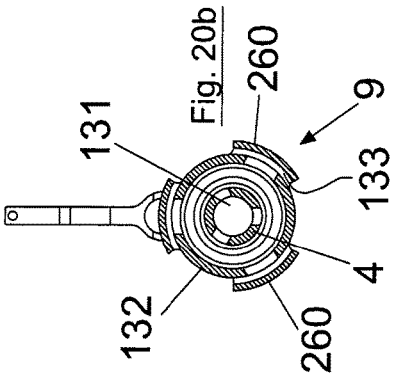

Fig. 20b

AUTOMATIC SUBMACHINE GUN FOR EXPLOITING RECOIL COMPRISING TWO OPPOSING LEVERS FOR THE HAMMER, ONE ASSOCIATED WITH SINGLE-SHOT FIRING MODE AND THE OTHER WITH BURST FIRING MODE

RELATED APPLICATIONS

This application is a U.S. national phase application of International Application No. PCT/IT2015/000026, filed Feb. 5, 2015; which application is incorporated by reference.

FIELD OF USE

The present invention relates to an automatic submachine gun for exploiting recoil.

BACKGROUND OF THE INVENTION

In the field of weaponry, various types of submachine guns are known which can be used like a normal pistol, held with either one or two hands, or else, using the extractable butt housed in the grip, like a carbine.

Such submachine guns can have various drawbacks tied to the inconvenience of using them due, for example, to the limited capacity of containment of the barrel bounce and perceived recoil, excessive weight and excessive bulkiness.

Other known submachine guns also pose problems tied to the limited safety of use, and imprecise operation which can be a cause, for example, of premature discharge.

SUMMARY OF THE INVENTION

The technical task of the invention is to provide an automatic submachine gun for exploiting recoil which overcomes the drawbacks of the prior art.

Within the scope of this technical task, one object of the invention is to provide an automatic submachine gun for exploiting recoil which is ergonomic, convenient and simple to use, long lasting, safe and precise in its operation.

This and other objects according to the invention are achieved by an automatic submachine gun for exploiting recoil comprising: a stock; a fixed barrel; a grip provided with an extractable butt; a bolt sliding in a direction parallel to the axis of the barrel inside the stock to lock the breech of the barrel; a device for recovering the recoil kinetic energy of the bolt; a hammer swinging in opposition and through the action of a spring actuator element between a cocked position and an uncocked position; a trigger assembly for the hammer, in turn comprising a swinging trigger pivoted on the stock and operatively connected to a sear lever, an opposing lever of the hammer for single shot fire actuatable by the sear lever, and an opposing lever of the hammer for continuous burst fire actuatable by the sear lever; a manual fire mode selector connected to a rotating shaft having a cam means interacting with said opposing lever of the hammer for single shot fire and with said opposing lever of the hammer for burst fire; an extractable magazine for loading cartridge ammunition into a cartridge chamber of the barrel; a firing pin for the ammunition actuatable by the hammer and sliding in a direction parallel to the axis of the barrel in a seat provided in the bolt; said hammer being configured and disposed so as to interact with the bolt in such a way as to absorb a significant fraction of the recoil kinetic energy of the bolt for the attainment of the cocked position.

In a preferred embodiment of the invention said hammer has a rotation pin positioned above the axis of the barrel.

In a preferred embodiment of the invention, said hammer has a point of impact with the firing pin situated below said rotation pin.

In a preferred embodiment of the invention said hammer has a point of impact with the bolt situated below the said rotation pin and above said point of impact with the firing pin.

In a preferred embodiment of the invention, said hammer has a centre of mass positioned below the point of impact with the bolt.

In a preferred embodiment of the invention, in the interaction of the hammer with the bolt, the length of the movement of the centre of mass of the hammer is amplified compared to the length of the movement of the bolt.

In a preferred embodiment of the invention, the trigger assembly for the hammer comprises an opposing lever of the hammer for preventing a premature discharge actuatable by the bolt on attaining its locked position.

In a preferred embodiment of the invention, the selector is solidly joined in rotation with said shaft and is rotatable into a first angular position in which the cam means blocks at least one of the opposing levers of the hammer for single shot fire and for burst fire, a second angular position in which the cam means does not interfere with the opposing levers of the hammer for single shot fire and for burst fire, and a third angular position in which the cam means disengages the opposing lever of the hammer for single shot fire from the hammer.

In a preferred embodiment of the invention, for single shot fire said sear lever has a cam engageable by the bolt so as to rotate the sear lever into a position of disconnection from the opposing lever of the hammer for single shot fire when the trigger is pressed.

In a preferred embodiment of the invention, the magazine, of the two-row type with individual exposure of the cartridge, has an asymmetrical placement of its retaining lips for the first cartridge, such as to place the first cartridge in an offset position relative to the median longitudinal axis of the magazine.

In a preferred embodiment of the invention, the stock has a ramp for feeding the cartridge into the breech of the barrel, the ramp being laterally offset relative to the longitudinal axis of the barrel.

In a preferred embodiment of the invention, the butt slides along a curved guide between a retracted position and an extracted position which is lower than the retracted position.

In a preferred embodiment of the invention, the submachine gun comprises a device for automatically locking the bolt in the open position after the last ammunition present in the magazine has been discharged, and a manual bolt release actuating lever.

In a preferred embodiment of the invention, the submachine gun comprises on the front a removable sleeve encircling the barrel and the front part of the stock and of the grip, said sleeve housing a device for manually cocking the hammer which comprises a swinging cocking handle pivoted to a support translatable along a linear guide parallel to the longitudinal axis of the barrel.

In a preferred embodiment of the invention, the head of the bolt has on top of it a plate for deflecting the cartridge case.

In a preferred embodiment of the invention, on the bolt there is mounted a cartridge case extractor having a catch for retaining the cartridge case head, positioned in front of the bolt head, said catch being pivotable between a position of

retaining and a position of releasing the cartridge case head in opposition and through the action of a spring.

In a preferred embodiment of the invention, the submachine gun has an automatic device for locking the trigger comprising a swinging lever engaged with the trigger and engageable with a stop fashioned in the stock.

In a preferred embodiment of the invention, the submachine gun comprises a device for automatically locking the firing pin when the trigger is not pressed, comprising a peg housed in a seat fashioned in the bolt, said peg being translatable transversely to the firing pin through the action of the opposing lever of the hammer for continuous burst fire in opposition to a spring between a position of interference with the firing pin and a position of non-interference with the firing pin.

In a preferred embodiment of the invention, screwed onto the muzzle of the barrel, where first slots passing through the thickness of the wall of the barrel are present, there is at least one flame-extinguishing cylindrical element comprising second slots passing through the thickness of the wall of the cylindrical element and offset from the first slots.

In a preferred embodiment of the invention, on said barrel, between said flame-extinguishing cylindrical element and an outer shoulder of said barrel, there is fitted a bushing-shaped support for a sight having at least one anti-rotation abutting element engageable in a corresponding seat fashioned on the barrel, and said support for a sight supports a peg for preventing the flame-extinguishing cylindrical element from coming unscrewed, said peg sliding in opposition and through the action of a spring, and being configured and disposed to be inserted in a corresponding seat fashioned on the flame-extinguishing cylindrical element.

The submachine gun according to the invention thus functions so as to exploit recoil, has a blowback system given by the mass of the bolt, to which, thanks to a particular solution, the mass of the hammer is added. Operation is automatic, whereas repeating can take place, alternatively and at the user's choice, in a semiautomatic manner (single shot fire), or an automatic one (continuous burst fire).

The start of the firing cycle takes place with the bolt closed. The trigger assembly is of the single action type.

After the last shot contained in the magazine is fired, the bolt remains automatically locked in the open position. A manual ambidextrous lever determines, at the user's choice, the immediate return into the closed position.

Given its configuration, the weapon can be employed—at the user's choice—as a normal pistol, held either with one or two hands, or else, using the extractable butt housed in the grip, as a carbine.

There is further preferably provided a front grip for the so-called "weak hand", which may be used at the user's choice. If he decides to use it, the front grip must simply be rotated downward by 90 degrees. Otherwise, the front grip remains housed in the front sleeve of the barrel.

The particular attention dedicated, at the design stage, to ergonomics—more specifically, the containment of barrel bounce and of perceived recoil—facilitate the use of the weapon in all the cases just mentioned.

It should be considered, moreover, again for the purposes of an ergonomic use, that all the controls of the weapon are ambidextrous, or reversible right hand/left hand, with the sole exception of the cocking handle.

BRIEF DESCRIPTION OF THE DRAWINGS

Additional features and advantages of the invention will be more apparent from the description of a preferred, but not exclusive embodiment of the submachine gun according to the invention, illustrated by way of illustration and not by way of limitation in the appended drawings, in which:

FIG. **1** shows a perspective view of the submachine gun with the butt closed;

FIG. **2** shows a perspective view of the submachine gun with the butt open;

FIG. **3** shows a general exploded view of the submachine gun;

FIG. **4** shows an enlargement of the exploded view A**1** of FIG. **3**;

FIG. **5***a* shows an enlargement of the exploded view A**2** of FIG. **3** and FIG. **5***b* shows the assembled cocking mechanism;

FIGS. **6***a* and **6***b* show a enlargement of the assembly A**3** of FIG. **3** in an assembled and exploded view, respectively;

FIG. **7** shows an enlargement of the exploded view A**4** of FIG. **3**;

FIG. **8** shows an enlargement of the exploded view A**5** of FIG. **3**;

FIG. **9** shows an enlargement of the exploded view A**6** of FIG. **3**;

FIGS. **10***a* and **10***b* show an enlargement of the exploded view A**3** of FIG. **3** and a sectional view of the assembled magazine, respectively;

FIGS. **11***a* and **11***b* show the trigger assembly with the selector in the safety position, and FIG. **11***c* shows a sectional view of the trigger assembly along the line A-A of FIG. **11***a;*

FIGS. **12***a* and **12***b* show the trigger assembly with the selector in the position of enabling single shot fire, and FIGS. **12***c* and **12***d* show, respectively, a sectional view of the trigger assembly along the line A-A of FIG. **12***a* and along the line B-B of FIG. **12***a*, respectively;

FIGS. **13***a*, **13***b*, **13***c*, **13***d* show the trigger assembly in a sectional view along the line B-B of FIG. **12***a* in the phases of disconnection of the opposing lever of the hammer for single shot fire;

FIGS. **14***a* and **14***b* show the trigger assembly with the selector in the position of enabling burst fire, and FIGS. **14***c* and respectively **14***d* show a sectional view of the trigger assembly along the line A-A of FIG. **14***a* and along the line B-B of FIG. **14***a*, respectively;

FIG. **15***a* shows the trigger assembly and FIGS. **15***b* and respectively **15***c* show a sectional view of the trigger assembly along the line C-C of FIG. **15***a* with the bolt in open position, in which the opposing lever which prevents premature discharge engages the hammer and, respectively, with the bolt in the closed position in which the opposing lever which prevents premature discharge has released the hammer;

FIGS. **16***a*, **16***b*, show the safety system for the firing pin with the firing pin locked, FIGS. **16***c*, **16***d*, show the safety system for the firing pin with the firing pin released;

FIGS. **17***a*, **17***b* show the bolt with the extractor in the position of releasing the case base, FIG. **17***c* shows the bolt with the extractor in the position of retaining the case head, and FIG. **17***d* shows the extractor;

FIG. **18***a* shows the trigger assembly and FIGS. **18***b*, **18***c* show the trigger assembly in a sectional view along the line E-E of FIG. **18***a* in two operating positions which show the inertial increase in the mass of the hammer;

FIG. **19***a* shows a first version of the flame-extinguishing element and FIG. **19***b* a sectional view of the flame-extinguishing element along the line A-A of FIG. **19***a;*

FIG. **20***a* shows a first version of the flame-extinguishing element and FIG. **20***b* a sectional view of the flame-extinguishing element along the line A-A of FIG. **20***a*.

DETAILED DESCRIPTION OF THE ILLUSTRATED EMBODIMENTS

In the description the terms right, left, front and rear will be used exactly as seen by the user of the weapon when he holds it.

With reference to the illustrated figures the submachine gun **1** is made up of a stock **2**, a grip **3** provided with an extractable butt **20**, a fixed barrel **4**, a hammer **22** swinging in opposition and through the action of a spring actuator element **23** between a cocked position and an uncocked position, a trigger assembly **5** for the hammer **22** comprising a trigger **21** suitable for activating a kinematic chain for releasing the hammer **22**, a bolt **6** sliding in a direction parallel to the longitudinal axis of the barrel **4** inside the stock **2** to close the breech of the barrel **4**, a firing pin **37** for the ammunition actuatable by the hammer **22** and sliding in a direction parallel to the longitudinal axis of the barrel **4** in a seat **38** provided in the bolt **6**, a system **7** for recovering the recoil kinetic energy of the bolt **6**, an extractable magazine **8** for loading cartridge ammunition into a cartridge chamber **210** of the barrel **4**, a flame-extinguishing cylindrical element **9**, a front sleeve **10**, a sight **11**, and a cocking mechanism **12**.

The stock **2** extends according to a longitudinal axis and the barrel **4** extends from its front end and is oriented with its longitudinal axis parallel to the longitudinal axis of the stock **2**.

The grip **3** is positioned below the stock **2** and has a first portion **3***a* for coupling to the stock **2** which extends according to a longitudinal axis parallel to the longitudinal axis of the stock **2** and a second portion **3***b* defining the grip properly speaking, which extends according to a longitudinal axis transverse to the longitudinal axis of extension of the first portion **3***a*.

The second portion **3***b* is characterized by its pronounced inclination, which enables the user to shoot with his wrist turned forward and therefore to facilitate opposing the barrel bounce of the weapon.

More precisely, the barrel **4** is screwed into an internally threaded cylindrical seat **14** fashioned in a lower front appendage **15** of the stock **2**.

The stock **2**, having roughly the shape of a parallelepiped, with an upside-down "U" shaped cross section, contains inside it the trigger assembly **5**, as well as the system **7** for recovering the kinetic energy of the bolt **6**.

In order to render the motion of the bolt **6** safe and regular, a pair of guides (not shown) for the sliding of the bolt **6** has been provided on the side walls of the stock **2**, on the inside.

The upper face of the stock **2** has threaded holes **17** for fastening, by means of screws, a shaped plate **18** having a dual function as a sight notch (endowed with fibre optic references at the sides of its window) and as a base for fastening all the accessories with Weaver style rail mounts or ones complying with American military standard MIL-STD 1913 (commonly known as Picatinny rails).

In the stock **2**, in a rearward position relative to the cylindrical seat **14** the barrel **4** is screwed into, there is a ramp **19** for feeding the cartridge, situated slightly laterally offset relative to the longitudinal axis of the barrel **4**. This choice, wholly unusual compared to the well-established tradition of forming, in portable automatic weapons, a feed ramp that is perfectly on an axis with the barrel, was motivated by the need to make it possible to feed cartridges with the particular magazine that will described below.

The lower front appendage **15** of the stock **2** further provides a base for fastening the trigger **21** and the pair of ambidextrous levers **250**, which, as we will see, control the locking lever **251** of the bolt **6**.

The stock **2** is joined to the grip **3** by means of two through pins **13***a*, **13***b*. The first pin **13***a* is set in a hole **13***a*' in the upper rear part of the weapon and also serves as a point of attachment for a carrying strap; the user can manually remove this pin **13***a* from its seat and proceed to disassemble the weapon, by overcoming a spring-operated retaining mechanism. Given the presence of the attachment for the strap, which has a ring shape, this pin **13***a* is asymmetrical and the user can decide whether to insert it in the weapon from the right side or the left one; presumably, a right-handed user will insert this pin **13***a* with the attachment for the strap on the left side of the weapon, and a left-handed person will do the opposite.

The second pin **13***b* is set in a hole **13***b*' and passes through the stock **2** in the aforesaid lower front appendage **15**.

The pair of ambidextrous levers **250** which control the locking lever **251** of the bolt **6** rotate about the second pin **13***b*. In accordance with a logical sequence of disassembly of the weapon, it is not possible to remove this second pin **13***b* without first removing the front sleeve **10** which encircles the barrel **4**, which will be discussed below.

The trigger assembly **5** for the hammer **22**, of an extractable type, is contained in its own frame **40**, fixed inside the stock **2**.

The rotation pin **39** of the hammer **22** is fixed to the frame **40**.

The trigger assembly **5** for the hammer **22** comprises the swinging trigger **21** pivoted by means of the pin **24** to the stock **2** and by means of the pin **25** to a sear lever **26**, a pin **27** fixed to the frame **40** and acting as a support pin in rotation for a first opposing lever of the hammer **22** for single shot fire **28**, for a second opposing lever of the hammer **22** for continuous burst fire **29**, and for a third opposing lever **30** of the hammer **22** to prevent premature discharge.

The opposing levers **28**, **29** and **30** of the hammer **22** in particular have one end **57**, **58** and **59** respectively engageable against a protuberance **55** fashioned on the hammer **22** in a cylindrical portion **56** of the hammer **22** where the seat for the rotation pin **39** of the hammer **22** is provided. The first opposing lever of the hammer **22** for single shot fire **28** is actuatable by the sear lever **26**, the second opposing lever of the hammer **22** for continuous burst fire **29** is likewise actuatable by the sear lever **26**, whilst the third opposing lever **30** of the hammer **22** for preventing premature discharge is actuatable by the bolt **6** upon attaining its closed position.

Each opposing lever **28**, **29**, **30** is actuatable in opposition and through the action of a corresponding spring **31**, **32**, **33**.

The rotation pins **24**, **25**, the pin **27**, and the pivot pin **39** of the hammer **22** are parallel to one another and perpendicular to the plane in which the weapon mainly lies, formed by the longitudinal axes of the first and second portion **3***a*, **3***b* of the grip **3**.

The horizontal sear lever **26** has its rear end coupled, by means of two appendages **45**, **46** fashioned thereupon, to special formations **47**, **48** fashioned on the levers opposing the hammer for single shot fire **28** and continuous burst fire **29**, respectively.

A helical spring **49** housed in a cylindrical seat **76** positioned in the front part of the stock **2** is provided for the return of the trigger **21** into a rest position.

A manual fire mode selector **34** is connected to a rotating shaft **35** having a cam means **36** interacting with the opposing lever of the hammer **22** for single shot fire **28** and with the opposing lever of the hammer **22** for burst fire **29**.

The shaft **35** is supported by the frame **40** rotatably about its own axis and is likewise oriented parallel to the rotation pins **24**, **25**, to the pin **27**, and to the pivot pin **39** of the hammer **22**.

The pin **27** also supports in rotation a manual anti-extraction lever **300** for preventing extraction of the shaft **35** from the frame **40**.

The anti-extraction lever **300** is movable in opposition and through the action of a spring **301** so as to bring a tooth **308** thereof from a position of engagement to a position of disengagement from a groove **302** of the shaft **35**.

The frame **40** has a side support portion **303** for the springs **31**, **32**, **33**, **301** removably positioned in a retaining seat **304** for a plate **305** having through holes for guiding the springs **31**, **32**, **33**, **301**. The side portion **303** is provided with a spring system **306** for locking and releasing its position in the seat **304**.

Removal of the side portion **303** is necessary in order to mount the springs **31**, **32**, **33**, **301**.

The manual selector **34** is switchable between a safety position, a position of enabling single shot fire, and a position of enabling burst fire.

The manual selector **34** is provided with a snap-lock system **307** for locking it into its working positions.

The system **307** comprises a pin **309**, which rotates integrally with the manual selector **34** and is movable in opposition and through the action of a spring **310** along a wall **311** fixed externally to the frame **40** and provided with snap-fit holes **312** for the pin **309**.

By way of example, when the manual selector **34** is in a horizontal position, the weapon is in a safety condition; if it is rotated downward by 45°, the weapon is set for single shot firing, whereas if it is rotated completely downward by 90°, the weapon is set for automatic continuous burst fire.

In the position of the manual selector **34** in which the weapon is in the safety condition, the cam means **36** blocks the opposing lever of the hammer **22** for burst fire **29**, thus preventing the pull of the trigger **21**.

In the position of the manual selector **34** in which the weapon is in the single shot firing condition, the cam means **36** does not interfere with the rotation of the levers opposing the hammer **22** for single shot fire **28** and for burst fire **29**, thus enabling the pull of the trigger **21**. The weapon comprises a system for disconnecting the trigger assembly **5** for single shot fire. On the horizontal sear lever **26**, at about half its length in the lower part, there is a cam **50**. During its retrograde motion caused by the shot, part of the bolt **6** enters into contact with said cam **50**, causing the horizontal sear lever **26** to rotate slightly upward: this causes the detachment of the appendage **45** from the formation **47** and hence the disengagement of the rear end of the horizontal sear lever **26** from the opposing lever of the hammer for single shot fire **28**. The horizontal sear lever **26** rises in opposition to a spring **77** which, when the user releases the trigger **21**, lowers the horizontal sear lever **26** again by means of a pusher **390** and the lever **26** re-engages with the opposing lever of the hammer for single shot fire **28**.

In the position of the manual selector **34** in which the weapon is in the burst fire condition, the cam means **36** moves the opposing lever of the hammer **22** for single shot fire **28**, disengaging it from the hammer **22**.

The trigger **21** comprises within it an automatic safety mechanism conceived to prevent accidental discharges due to pressing, presumably involuntary, on the sides of the trigger itself (the typical case is friction against the trigger when the weapon is introduced into a holster). A lever **51** pivoted with a pin **53** to the trigger **21** is provided at the centre of the trigger **21**. During the user's normal shooting action, the lever **51** is pressed; this enables the trigger **21** to complete its full rotation and, therefore, to start the kinematic chain of the release until firing. In contrast, if the pressing of the trigger **21** is not accompanied by simultaneous pressing said lever **51**, the upper end **52** of the lever **51** will impact against the stock **2** and prevent the trigger **21** from rotating; the action of undue firing is thus inhibited.

One of the salient features of the weapon consists in the fact that, contrary to convention, the rotation pin **39** of the hammer **22** is positioned in the upper parte thereof and, again contrary to what is normally encountered in other portable firearms, strikes the tail of the firing pin **37** with a rotational motion that goes from up to down.

The kinetic thrust of the hammer **22** is given by the spring actuator element **23**, comprising for example a helical spring **313** housed in its own cylindrical case **314** pivoted with a pin **43** to the frame **40**, and which transmits the accumulated force through a shaft **41**, whose cylindrical end works in a specific seat **42** fashioned in the rear part of the hammer **22**.

The hammer **22** has the rotation pin **39** positioned above the longitudinal axis of the barrel **4**, a point of impact **200** with the firing pin **37** situated below its rotation pin **39** on the extension of the axis of the barrel **4**, and a point of impact **201** with the bolt **6** situated below its rotation pin **39** and above the point of impact **200** with the firing pin **37**, at a distance D1 from the longitudinal axis of the barrel **4**.

The centre of mass G of the hammer **22** is in turn situated below the point of impact **201** with the bolt **6**.

Preferably, the position of the centre of mass G of the hammer **22** is substantially on the extension of the axis of the barrel **4**.

The hammer **22** is characterized in particular by its considerable size and mass.

Since the weapon operates with blowback action, the shot is opposed by the inertia of the mass of the bolt **6**, to which we must add the mass of the hammer **22** multiplied by a factor of inertial increase.

Said factor of inertial increase arises from the fact that the hammer **22** moves together with the bolt **6**, pushed by the bolt **6** itself; the push, and hence the force, is close to its centre of rotation and far from the centre of mass (barycentre) of the same, thus increasing the angular velocity.

With reference to FIG. **18***c*, the factor "Fii" of inertial increase of the mass of the hammer **22**, greater than one, is given by the ratio between the length N of the arc of circumference travelled by the centre of mass G as a result of the retrograde motion of length Q of the bolt **6**, and the length Q itself.

This simple solution enables a considerable reduction in the mass of the bolt **6**, which is necessary to ensure the safe operation of the weapon and re-vectorization of part of the energy (that contained in the hammer **22**), which with its angular motion discharges upward, contributing to stabilizing the weapon during firing.

The remaining part of energy of the bolt is "blown back", as conventionally occurs, but with an evident reduction in linear stress compared to conventional blowback-operated weapons. The very reduction in the weight of the bolt thus

obtained further contributes to stabilization, given the reduction in the moving masses (swinging masses).

Moreover, the large mass of the hammer **22** makes it possible, by simply replacing the spring actuator element **23**, to adjust the burst fire rate within a certain range, though always ensuring adequate percussion.

The bolt **6** is slidingly supported inside the stock **2** along a pair of sliding guides which are interrupted for a portion about halfway along the length of the bolt **6** to enable the correct insertion thereof inside the stock **2**.

Having vaguely the shape of a parallelepiped, the bolt **6** has in its rear part, toward the sides, two cylindrical longitudinal seats **61** housing within them an equal number of helical springs **62** which form the kinetic energy recovery system **7** of the bolt **6**.

The two springs **62** are twin and constrained at their rear end to a rectangular plate **92**.

The plate **92** firmly retains and guides the springs **62**; however, it does not prevent the springs **62** themselves from bending in a longitudinal direction: this enables them to be easily inserted into their cylindrical seats **61**.

The plate **92** is in contact with a second plate **93** made of a deformable elastic material which the bolt **6** comes up against at the end of its retrograde motion.

The plate **93** has the function of dampening the stroke of the bolt **6**.

The kinetic energy recovery system **7** of the bolt **6** is housed in part in the bolt **6** (that is, the springs **62**), whereas the plate **92** is snap fitted into the rear part of the stock **2** by means of two cylindrical pegs **94**, which are inserted into an equal number of corresponding holes fashioned in the stock **2** itself.

It is relevant to note that, for ordinary disassembly purposes, the kinetic energy recovery system **7** of the bolt **6**, despite being made up of several parts, forms a single piece.

In the rear part of the bolt **6**, in the centre, there is also a vertical slot **63**, which the hammer **22** enters into in the final phase of its rotation, when it transmits the kinetic impulse to the tail of the firing pin **37**. In the centre of said slot **63**, at the bottom, a seat **38** is provided for the firing pin **37**: a through hole which extends on different levels. Analogously, the firing pin **37** has a cylindrical shape which extends on three levels; its helical opposing spring **69** is fitted over it. The firing pin **37** is held in its seat by a plate **70** sliding in a vertical direction inside a receptacle fashioned in the rear slot **63** of the bolt **6**.

The horizontal sear lever **26** slides inside the bolt **6**, in a groove **71** in a protected position.

The weapon is provided with a mechanism for automatically locking the firing pin **37** when the trigger **21** is not pressed, comprising a peg **72** sliding transversely to the direction of movement of the firing pin **37** in a seat **73** fashioned in the bolt **6**.

The peg **72** slides through the action of the opposing lever of the hammer for burst fire **29** and in opposition to a spring **74** between a position of interference with the firing pin **37** and a position of non-interference with the firing pin **37**.

In particular, with the trigger **21** in a rest position, the opposing lever of the hammer **22** for burst fire **29** (which is always solidly joined with the trigger **21**) is disengaged from the peg **72**, which is pushed upward by the spring **74** housed in the lower part of the seat **73**. When it is in this higher position, the peg **72** is inserted into a snap-fit seat **75** fashioned in the firing pin **37**: this prevents axial sliding of the firing pin **37** itself. On the other hand, when the peg **72** is in the lower position, it does not in any way engage the firing pin **37**, which is thus free to slide; said condition occurs when the trigger **21** is kept pressed: when the trigger **21** is pulled, in fact, the horizontal sear lever **26** is activated and in turn rotates the opposing lever **29** until causing it to engage with the peg **72**, which, on being pushed into a lower position, is freed from the snap-fit seat **75**.

An extractor **81** for extracting the cartridge case **320** from the cartridge chamber of the barrel **4** is mounted on the bolt **6**.

The extractor **81** has a catch **80** for holding the cartridge case head positioned in front of the head of the bolt **6**.

The catch **80** is suitable for engaging with the perimeter groove normally provided on the case.

The catch **80** is movable between a position of retaining and a position of releasing the cartridge case head in opposition and through the action of a spring (not shown).

The conception of the extractor **81** is wholly original: the visible part thereof vaguely has the shape of an "L", whose shorter part, positioned below when the extractor **81** is mounted on the bolt **6**, forms the catch **80**. During the phase of feeding the cartridge into the cartridge chamber **210** of the barrel **4**, the catch **80** of the extractor **81** enables the cartridge case head to rise until being completely seated in the head **100** of the bolt **6**; at this point the catch **80** of the extractor **81** holds the cartridge itself in place by acting on the perimeter groove normally present on its case. To render possible the movement of the catch **80** of the extractor **81**—first to receive the case head and then to hold it—the longest part of the extractor, situated at the top in a nearly upright position, can rotate within a narrow angle (but sufficient to carry out the previously described functions) by virtue of the fact that solidly joined to it at its upper end there is a shaft **85** acting as a rotation pin housed inside a cylindrical seat **86** fashioned on the front part of the bolt **6**. The spring is wound around the shaft **85** and its front end is hooked onto the extractor **81**.

The action of this spring operates the catch **80** of the extractor **81**.

The extractor **81** also has a protrusion **88** engaged in a seat fashioned in the bolt **6** to prevent the shaft **85** from slipping out of its cylindrical seat **86**.

The advantages deriving from the construction of the extractor **81** are its great simplicity, given that the extractor is made in one piece, and the possibility of replacing it rapidly, without the need for any tools.

The head **100** of the bolt **6** is slightly recessed on the front face of the bolt **6** in order to envelop the cartridge case head present in the cartridge chamber of the barrel **4**.

At the centre of the head **100** of the bolt **6** there is the end of the seat **38** from which the firing pin **37** slides out.

Laterally to the head **100**, the bolt **6** has an indentation **82** necessary for the operation of an ejector **84** of the cartridge case extracted from the cartridge chamber **210** of the barrel **4**. In particular, the indentation **82** permits the bolt **6** to slide freely without any hindrance from the ejector **84**.

On the upper part of the bolt **6**, finally, there is a longitudinally extending appendage **89**, a sort of "hump", whose front part acts as a support for a shaft **90**, which extends longitudinally in a direction parallel to the axis of the barrel **4**, and a plate **91** with a rectangular shape.

The shaft **90** is part of the cocking mechanism of the bolt, which will be discussed below, whereas the plate **91**, which is located above the head of the bolt **9**, acts as a deflector for the discharged cases: it diverts them downward to prevent them from hitting anyone who may be standing next to the weapon.

The grip **3** of the weapon performs various functions: besides acting as a closure for the lower part of the stock **2**

and a grip strictly speaking, it provides a seat **109** for the magazine **8**, a fastening base for a system for releasing the magazine **8**, a protective bridge **101** for the trigger **21**, a seat for fastening the ejector **84** and a sliding support guide for the butt **20**.

Fashioned inside the second portion **3***b* of the grip **3** there is a seat **109** for the magazine **8**, which, as usually occurs, must be inserted therein and extracted through the opening **103** present in the lower part of the seat **109**.

Located in the second portion **3***b* of the grip **3**, at the rear point of attachment of the bridge **101** of the trigger **21**, there is the release mechanism of the magazine **8**, comprising a tooth **104**, pushed by a spring **105**, which is inserted into a specific seat **106** fashioned on a case **107** of the magazine **8** itself. To release said tooth **104**, and thereby enable the extraction of the magazine **8**, the user must act on a specific control lever **108** while maintaining his hold on the weapon.

The extraction guide of the butt **20** has a curved configuration, in particular bow-shaped, to assure the movement of the butt **20** between a position in which it is retracted inside the grip **3** and a position in which it is extracted from the grip **3** and lower than in the retracted position.

In particular, the butt **20** has a vaguely "U" shaped structure comprising two curved prongs **113** sliding inside the grip. Said architecture is particularly important for the purposes of the weapon's ergonomics, because when the butt **20** is housed inside the grip **3** it does not create additional bulk and does not cause disturbance to the user and, conversely, when the butt **20** is in the extended position, its use is the same as that of a conventional butt.

A retaining mechanism for the butt **20**, as well as a butt plate **114**, are applied to the part of the structure of the butt **20** which joins the two prongs **113**. The aforesaid retaining mechanism for the butt **20** automatically locks it inside its seat in the grip **3**: to extract the butt **20** it is necessary to act on a specific lever **115** situated on the lower part of the weapon. Analogously, also when the butt **20** is in a completely extended position, the user must press said lever **115** in order to make it go back into its seat.

The weapon is fed by an extractable prismatic magazine **8**, of the two-row type with individual exposure of the cartridge, which differs from every preceding design because of the asymmetrical placement of the lips **118**, **119**. The first cartridge **117** present therein is offset relative to the median longitudinal axis **120** of the magazine **8** itself; this means that the lips of the magazine **118**, **119**, which have the task of holding the cartridges inside them and of guiding the first of them toward the breech of the barrel **4** during feeding, are at different heights. This particular architecture is motivated by the desire to solve the well-known problem that regards conventional loaders of the type presenting cartridges individually: in fact, a slight deformation of their lips is sufficient to prevent them from functioning correctly. It may occur, in fact, that the capacity of the lips to retain the first cartridge is weakened until becoming insufficient and causing the weapon to jam.

The magazine **8**, on the other hand, exploits the geometry of the lips **118**, **119** to obtain a more reliable retention of the ammunition contained therein, comparable to that provided by two-row loaders with alternating presentation of the cartridges, but with more compact dimensions. The particular geometry of the magazine **8**, in fact, enables a different arrangement of the forces inside it, with less stress on the lips **118**, **119**, which can correctly perform their function even in the event of substantial deformations.

The magazine **8** has a floor plate **124** for lifting the cartridge and a helical spring **121** which acts on it by pushing it upward; both are contained in the prismatic case **122**, which is closed off on the bottom by a base **123**, fixed to the case **122**.

The weapon has a device for automatically locking the bolt **6** in the open position after the last ammunition present in the magazine **8** has been discharged, and a manual actuating lever **122** for releasing the bolt **6**.

The device **123** for automatically locking the bolt **6** comprises a locking lever **251** pivoted with a pin **125** in a hole **252** on the lower front appendage **15** of the stock **2**.

The locking lever **251** has a first appendage **253** for taking up the movement from the lifting floor plate **124** and, on the side opposite the first appendage **253** relative to the pin **125**, and second appendage **254** for taking up the movement from the release lever **250**, and in particular from a tooth **255** fashioned on the release lever **250**.

After the explosion of the last cartridge **117** contained in the magazine **8**, the lifting floor plate **124**, on reaching the highest position possible as a result of the thrust of the spring **121**, enters into contact with the appendage **253** fashioned on the locking lever **251** of the bolt **6** and pushes it upward. The locking lever **251**, when it rotates through the action of the lifting floor plate **124**, comes to lock the bolt **6** into its rearward position.

When the user acts on the release lever **250**, the rotation thereof as a result of the engagement of the tooth **255** with the appendage **254** brings about a rotation contrary to the previous one, thanks to which the bolt **6** is released from the locking lever **251** and, as a result of the expansion of the two recovery springs **62**, returns immediately into the closed position.

The barrel **4** is characterized by its cylindrical outer profile. As seen, in the breech portion the barrel **4** has, for a short length, a thread used to fasten it to the stock **2** of the weapon.

A transverse locking pin **130** prevents accidental unscrewing of the barrel **4**.

Screwed onto the muzzle of the barrel **4**, where first slots **131** passing through the thickness of the wall of the barrel **4** are present, there is at least one flame-extinguishing cylindrical element **132** comprising second slots **133** passing through the thickness of the wall of the cylindrical element **132** offset from the first slots **131**.

In particular, the barrel **4** has three first longitudinal slots **131**, spaced apart by 120°, just as the cylindrical element **132** has three second longitudinal slots **133** spaced apart by 120° and offset by 60° relative to the first slots **131**.

The barrel/flame-extinguishing element thus formed attenuates all flashes produced by the combustion of the propellant charge of the ammunition.

A second type of flame-extinguishing cylindrical element, of slightly larger dimensions, and capable of also attenuating any indirect light that should come to be created inside it, is also envisaged. The difference consists in that the second slots are covered with further sectors of the cylindrical wall **260**, suitably spaced apart, which enables the gases to expand radially.

On the barrel **4**, between the flame-extinguishing cylindrical element **132** and an outer shoulder **134** of the barrel **4**, there is fitted a bushing-shaped support **135** for a sight **136**.

The support **135** has at least one anti-rotation abutting element **180** engageable in a corresponding seat **137** fashioned on the barrel **4**. Preferably, two anti-rotation abutting elements **180** are provided in a diametrically opposed position on the support **135**.

The support **135** supports a locking peg **138** for preventing the flame-extinguishing cylindrical element **132** from coming unscrewed.

The peg **138** slides in opposition and through the action of a spring **139** in a bushing-shaped guide **140** having a longitudinal axis parallel to the axis of the barrel **4**.

The guide **140** is interposed between the sight **136** and the support **135**.

The guide **140**, the sight **136** and the support **135** are made in one piece.

The peg **138** is configured and disposed so as to be inserted in a corresponding seat **141** fashioned on the flame-extinguishing cylindrical element **132**.

In particular, to enable the flame-extinguishing cylindrical element **132** to be screwed on for the necessary length, the flame-extinguishing cylindrical element **132** has a number of perimeter seats **141** selectively engageable by the peg **138**.

Since through the action of the spring **139** the peg **138** is inserted in a corresponding seat **141**, the rotation of the flame-extinguishing cylindrical element **132** is inhibited. In order to unscrew the flame-extinguishing cylindrical element **132** it is thus necessary to move back the peg **138**, even only with one's fingers, until it disengages from the seat **141** in which it is inserted.

In the sight **136** properly speaking, an optic fibre is mounted. In order to correctly collimate the weapon, the user exploits the profile of the sight **136**, made more visible and more easily acquirable thanks to the presence of the optic fibre.

The weapon has, as said, a removable sleeve **10** on the front which encircles the barrel **4** and the front part of the stock **2** and of the grip **3**.

The sleeve **10** houses within it a device for manually cocking the hammer **22**, comprising a swinging cocking handle **143** pivoted with a pin **144** to a support **145** translatable along a linear guide **146** parallel to the longitudinal axis of the barrel **4**.

The linear guide **146** consists, in particular, of a cross member fixed to the front part of the stock **2**.

The handle **143** is configured and disposed so as to engage the bolt **6**, and in particular the head of the shaft **90** fixed to the bolt **6**, in a point radially distanced from the pin **144**.

During shooting, the cocking handle **143** remains stationary inside its housing; to use it, it is necessary to rotate it so that it comes out from the side of the weapon.

The initial rotation of the cocking handle **143** exploits a lever arm which enables the greater initial resistance opposed by the hammer **22** to be easily overcome (obviously when the latter is in the uncocked position). Therefore, the retrograde movement of the cocking handle **143**, as a result of the pull exerted on it by the user, is transformed into a linear motion which accompanies the bolt **6** into its most rearward position.

The front sleeve **142** also performs other functions.

With the aim of increasing the weapon's versatility of use to a maximum, a supplementary front grip **147** is provided for the so-called "weak hand" (the left one in the case of right-handed users, the right one in the case of left-handed users). Said supplementary front grip **147** can be used both with the butt **20** in a closed position—that is, when the weapon is held like a normal pistol—and with the butt **20** in the extended position—that is, when the weapon is held like a normal carbine. In order to use the supplementary front grip **147**, it is necessary to turn it downward and forward by about 90°, until reaching the automatic locking position. A spring-operated locking mechanism (not shown), fashioned on the pin **148** about which the grip rotates, serves, in fact, to lock it firmly in the open position. To bring the supplementary front grip **147** back into the closed position, it is necessary to press on the pin **148** thereof from one side of the weapon in order to deactivate the spring-operated locking mechanism. In the closed position, the outer profile of the grip is harmonized with the silhouette of the weapon; when closed, the supplementary front grip **147** can be used to grasp the weapon like a normal rod of a carbine.

On the sides of the front sleeve **10** there are threaded holes for fastening, by means of screws, an equal number of shaped plates **149**, **150** having the function of a base for fastening all the accessories with Weaver style rail mounts or ones complying with American military standard MIL-STD 1913 (commonly known as Picatinny rails).

The front sleeve **10** must be removed in order to be able to access and extract the through pin which constrains the stock **2** and the grip **3** to each other.

Generally speaking, the use of the weapon takes place according to the methods commonly known among the users of said tools, notwithstanding the different procedures deriving from the particular features of the weapon itself. Intrinsically, the weapon offers maximum assurances of safety (automatic mechanism which prevents premature discharge when the bolt is not completely closed, automatic mechanism which automatically locks the firing pin when the trigger is not pressed and automatic mechanism which prevents the trigger from being pulled back involuntarily).

Also when the weapon is handled by the user, a maximum degree of safety is always offered, thanks to its particular conception. In fact, the manual safety control has been conceived in such a way as to prevent the hammer from being cocked (and thus prevent use of the weapon) when the control lever is in a horizontal (safety) position. To load the weapon correctly in conditions of safety, the user—after ascertaining that the weapon is discharged according to the universally known and applied standard procedures—must:

put the fire mode selector **34** in the single shot position;

pull the cocking handle **143** back completely;

put the fire mode selector **34** in the safety position;

insert a magazine **8** with ammunition in the seat provided until it is engaged.

At this point, with the fire mode selector **34** in the safety position, it is possible pull the cocking handle **143** back all the way and release it so as to insert a cartridge **117** into the cartridge chamber of the barrel **4**. It should thus be noted that the actual operation of loading the weapon takes place with the fire mode selector in the safety position. In order to fire, the user needs only lower the fire mode selector **34** into the preferred position (single shot or continuous burst fire) and press the trigger **21**.

After completing the shot, it is sufficient to move the fire mode selector **34** back into the safety position (horizontal).

Unloading of the weapon also takes place in conditions of safety, because with one shot still present in the cartridge chamber of the barrel **4** and the magazine **8** containing the cartridges **117**, it is sufficient:

to move the fire mode selector **34** into the safety position;

to extract the magazine **8** with the ammunition from its seat after actuating the release control; and to pull the cocking handle **143** all the way back to eject the cartridge present in the cartridge chamber of the barrel **4**.

The weapon thus conceived is susceptible of numerous modifications and variants, all falling within the scope of the inventive concept; moreover, all the details may be replaced with technically equivalent elements.

The materials used, as well as the dimensions, may in practice be of any type according to requirements and the state of the art.

The invention claimed is:

1. An automatic submachine gun for exploiting recoil, comprising:

a stock (2);

a fixed barrel (4);

a grip (3) provided with an extractable butt (20);

a bolt (6) configured to slide in a direction parallel to a longitudinal axis of the barrel (4), inside the stock (2), to lock a breech of the barrel (4);

a device for recovering recoil kinetic energy of the bolt (6);

a hammer (22) configured to swing in opposition to, and through action of, a spring actuator element (23), the hammer configured to swing between a cocked position and an uncocked position;

a trigger assembly for the hammer (22) comprising: in turn a swinging trigger (21) pivoted on the stock (2) and operatively connected to a sear lever (26); a first opposing lever (28) of the hammer (22) for single shot fire actuatable by the sear lever (26); and a second opposing lever (29) of the hammer (22) for continuous burst fire actuatable by the sear lever (26);

a manual fire mode selector (34) connected to a rotating shaft (35) having a cam (36) configured to interact with said first opposing lever (28) of the hammer for single shot fire and with said second opposing lever (29) of the hammer for burst fire;

an extractable magazine (8) for loading cartridge ammunition into a cartridge chamber (210) of the barrel (4); and

a firing pin (37) actuatable by the hammer (22) and configured to slide in a direction parallel to the longitudinal axis of the barrel (4) in a seat provided in the bolt (6);

where the hammer (22) is configured and disposed to interact with the bolt (6) to absorb a significant fraction of the recoil kinetic energy of the bolt (6) for attainment of the cocked position;

where the hammer (22) has a point of impact (201) with the bolt (6), where a centre of mass (G) of the hammer (22) is positioned below the point of impact (201) of the hammer (22) with the bolt (6), and where, upon interaction of the hammer (22) with the bolt (6), a length of movement of the centre of mass (G) of the hammer (22) is amplified relative to a length of movement of the bolt (6); and

where the gun is blowback operated, and where the breech of the barrel is not locked mechanically at time of firing.

2. The submachine gun according to claim 1, wherein the hammer (22) has a rotation pin (39) positioned above the longitudinal axis of the barrel (4).

3. The submachine gun according to claim 2, wherein the hammer (22) has a point of impact (200) with the firing pin (37) situated below said rotation pin (39).

4. The submachine gun according to claim 3, wherein the point of impact (201) of the hammer (22) with the bolt (6) is situated below said rotation pin (39) and above said point of impact (200) of the hammer (22) with the firing pin (37).

5. The submachine gun according to claim 1, wherein the trigger assembly for the hammer further comprises a third opposing lever (30) of the hammer (22) for preventing a premature discharge actuatable by the bolt (6) on attaining a locked position.

6. The submachine gun according to claim 1, wherein said manual fire mode selector (34) is solidly joined in rotation with said rotating shaft (35) and is rotatable into: a first angular position, where the cam (36) blocks at least one of the first and the second levers (28, 29) opposing the hammer (22) for single shot fire and for burst fire; a second angular position, where the cam (36) does not interfere with the first and the second levers (28, 29) opposing the hammer (22) for single shot fire and for burst fire; and a third angular position, where the cam (36) disengages the first opposing lever (28) of the hammer for single shot fire from the hammer (22).

7. The submachine gun according to claim 1, wherein, for single shot fire, said sear lever (26) has a lever cam (50) engageable by the bolt (6) to rotate the sear lever (26) into a position of disconnection from the first opposing lever (28) of the hammer for single shot fire when the trigger (21) is pressed.

8. The submachine gun according to claim 1, wherein said magazine (8), of the two-row type with individual exposure of a cartridge, has an asymmetrical placement of retaining lips (118, 119) for a first cartridge, to place the first cartridge in an offset position relative to a median longitudinal axis (120) of the magazine (8).

9. The submachine gun according to claim 1, wherein the stock (2) has a ramp (19) for feeding cartridge ammunition into the breach of the barrel (4), where the breech of the barrel (4) is laterally offset relative to the longitudinal axis of the barrel (4).

10. The submachine gun according to claim 1, wherein said extractable butt (20) is configured to slide along a curved guide (112) between a retracted position and an extracted position, where the extracted position is lower than the retracted position.

11. The submachine gun according to claim 1, further comprising a device for automatically locking the firing pin (37) when the trigger (21) is not pressed, the device comprising a peg (72) housed in a seat (73) fashioned in the bolt (6), said peg (72) being translatable transversely to the firing pin (37) through action of the second opposing lever (29) of the hammer in opposition to a spring between a position of interference with the firing pin (37) and a position of non-interference with the firing pin (37).

12. The submachine gun according to claim 1, further comprising at least one flame-extinguishing cylindrical element (132), screwed onto the muzzle of the barrel (4), where first slots (131) pass through a thickness of a wall of the barrel (4), the at least one flame-extinguishing cylindrical element (132) comprising second slots (133) passing through a thickness of a wall of the cylindrical element (132) and offset from the first slots (131).

13. The submachine gun according to claim 12, wherein, on said barrel (4), between said at least one flame-extinguishing cylindrical element (132) and an outer shoulder (134) of said barrel (4), there is fitted a bushing-shaped support (135) for a sight (136) having at least one anti-rotation abutting element (180) engageable in a corresponding seat (137) fashioned on the barrel (4), wherein said support (135) for said sight (136) supports a peg (138) for preventing the at least one flame-extinguishing cylindrical element (132) from coming unscrewed, said peg (138) sliding in opposition to and through action of, a spring, and being configured and disposed to be inserted in a corresponding seat (141) fashioned on the at least one flame-extinguishing cylindrical element (132).

* * * * *